NOTICE OF A REGULAR MEETING
OF THE PLANNING COMMISSION OF THE TOWN OF CLARKDALE

In accordance with Resolution #215 of the Town of Clarkdale, and Section 38-431.02, Arizona Revised Statutes,

NOTICE IS HEREBY GIVEN that the Planning Commission of the Town of Clarkdale will hold a REGULAR Meeting Tuesday, September 18, 2012, at 6:00 p.m., in the Men's Lounge of the Clark Memorial Clubhouse, 19 N. Ninth Street, Clarkdale, Arizona.

All members of the public are invited to attend.

The undersigned hereby certifies that a copy of this notice was duly posted on the Town Hall bulletin board, located at 890 Main Street, Clarkdale, Arizona on the 10th day of September, 2012 at 9:00 a.m.

Dated this 10th day of September 2012 by:

Vicki McReynolds

Vicki McReynolds
Administrative Assistant II

ALL ITEMS ON THIS AGENDA ARE SCHEDULED FOR DISCUSSION AND POSSIBLE ACTION, UNLESS OTHERWISE NOTED.

1. **CALL TO ORDER:**

2. **ROLL CALL:**

3. **PUBLIC COMMENT:** The public is invited to provide comments at this time on items that are not on this agenda. Action taken as a result of public comment will be limited to directing staff to study the matter, or scheduling the matter for further consideration and decision on a later agenda, as required by the Arizona Open Meeting Law. Each speaker is asked to limit comments to **FIVE MINUTES.**

4. **MINUTES:** Consideration of the **Regular Meeting Minutes of June 19, 2012.**

5. **REPORTS:**
   a. Chairperson and Members Special Events Report:
   b. Director's Report:

6. **OLD BUSINESS**

   a. **WORKSESSION:** Discussion regarding proposed outline for adopting agricultural use in residential zoning districts.

   b. **WORKSESSION:** Discussion regarding Sustainability Implementation Strategies.

7. **NEW BUSINESS**

   a. **PUBLIC HEARING:** A public hearing to review proposed changes to the Subdivision Regulations, including deletion of Chapter 12 of the Town Code in its entirety, adoption of a completely revised version of the Subdivision Regulations as Chapter 12 of the Town Zoning

Code and deletion of Article 12-8: Golf Water Use Regulations from the Subdivision Regulations. This section will be adopted into Chapter 4, General Provisions, of the Town Zoning Code.

b. **WORKSESSION:** Discussion regarding the 89A Corridor Commercial Overlay District.

8. FUTURE AGENDA ITEMS:

9. ADJOURNMENT:

Reasonable accommodations may be requested by contacting Town Hall at (928)-634-9591, (TTY: 1-800-367-8939) at least 72 hours in advance of the meeting.

MINUTES OF A REGULAR MEETING OF THE PLANNING COMMISSION OF THE TOWN OF CLARKDALE HELD ON TUESDAY, JUNE 19, 2012, IN THE MEN'S LOUNGE OF THE CLARK MEMORIAL CLUBHOUSE, 19 N. NINTH STREET, CLARKDALE, AZ.

A Regular Meeting of the Planning Commission of the Town of Clarkdale was held on Tuesday, June 19, 2012, at 6:00 p.m., in the Men's Lounge of the Clark Memorial Clubhouse, 19 N. Ninth Street, Clarkdale, AZ.

Planning Commission:

Chairperson	Jack Van Wye	Present
Vice Chairperson	Vic Viarengo	Present
Commissioners	Jorge Olguin	Present
	Karen Daniels	Present
	Dave Puzas	Absent

Community Development Staff:

Community Development Director	Jodie Filardo
Senior Planner	Beth Escobar

Others in Attendance: None.

1. **AGENDA ITEM: CALL TO ORDER**: The Chairperson called the meeting to order at 6:04 p.m.

2. **AGENDA ITEM: ROLL CALL:** The Senior Planner called roll.

3. **AGENDA ITEM: PUBLIC COMMENT:** The public is invited to provide comments at this time on items that are not on this agenda. Action taken as a result of public comment will be limited to directing staff to study the matter, or scheduling the matter for further consideration and decision on a later agenda, as required by the Arizona Open Meeting Law. Each speaker is asked to limit his or her comments to **FIVE MINUTES**.

   Cheri Deshawn of Clarkdale had a question regarding enforcement of posted speed limits. Community Development Director Filardo invited Ms. Deshawn to stop by the department and discuss this issue with staff.

4. **AGENDA ITEM: MINUTES:** Consideration of the **Regular Meeting Minutes of May 15, 2012.** The Chair entertained a motion to accept the minutes. Commissioner Daniels motioned to approve the Regular Meeting Minutes of May 15, 2012. Commissioner Olguin seconded the motion. The motion passed unanimously.

5. **AGENDA ITEM: REPORTS:**

Chairperson & Members Special Events Report: None

Director's Report:

Director Filardo reviewed the report that was included in the Commission packet.

NEW BUSINESS

6. **AGENDA ITEM: WORKSESSION:** Discussion regarding adding agricultural uses as permitted uses in residential zoning districts.

Senior Planner Escobar provided a brief summary of the staff report. The Commissioners discussed the following items:

- The difference between a home garden and a commercial agricultural use.
- Prohibition of the use of pesticides and genetically modified organisms in agricultural uses.
- How allowing local agriculture would increase food security for the Verde Valley.
- Support of a community garden.
- What economic impact more commercial agricultural use in the area might have on the Clarkdale economy, such as through a growth in businesses related to food processing and agricultural supplies.
- Whether elements in our soil, such as arsenic, would transfer to plants.

The Chair opened the worksession to public comment.

Mike Wise, Sedona, stated that he was a local realtor and in favor of agricultural uses being allowed in residential zoning districts. Planned communities in the Napa Valley area of California could be used as a blueprint. Open space used for agricultural purposed can add aesthetic value to a development. He believes this would benefit property values. The Town Park would be a great area to have a Farmer's Market.

Cheri DeShaw, Clarkdale. Stated she is a new resident of Clarkdale and is interested in growing grapes for wine production and medicinal herbs on her property. She also has fruit trees on her property. Stated we need a farm supply store in the area.

The Chair closed the public comment segment of the meeting.

This being a worksession only, there were no actions taken. Staff was given direction to develop an outline for an ordinance allowing agricultural uses in residential zones that included a tiered approach that had some agricultural uses allowed as permitted uses and some uses requiring a conditional use permit.

OLD BUSINESS

7. **AGENDA ITEM: WORKSESSION:** General Plan Implementation Strategies.

The Commission discussed the following:

- Scheduling issues and staff capacity regarding the extensive list of implementation strategies.
- Focusing on 2-3 priorities as a Commission, and forming small task groups to tackle the priorities.

- Soliciting assistance from other members of the community to participate on these task groups.
- Eliminating the Circulation Implementation Strategies, Education Implementation Strategies, Cost of Development Implementation Strategies and the Community Design Implementation Strategies for consideration as priorities since these categories are outside the direct purview of the Commission.
- Commissioner Daniels and Commission Olguin agreed to work on the first task force to develop a sustainability checklist for local developers.
- Adding a regular discussion item to the Planning Commission agenda to discuss issues related to the Sustainability Initiative.
- An annual report, the first one due March 2013, will be presented to the Commission and Town Council regarding progress on implementation of the General Plan goals and strategies.

This being a worksession only, there were no actions taken.

8. **AGENDA ITEM: FUTURE AGENDA ITEMS:**
   - Sustainability checklist for local developers
   - Continue discussion regarding adding agricultural uses to residential zones
   - Commission discussion regarding identifying additional, (not more than two) implementation strategies to work on this year.

9. **AGENDA ITEM: ADJOURNMENT:** If there is no further business for the good of the order, the Chair will entertain a motion for adjournment. Commissioner Olguin motioned to adjourn the meeting. Commissioner Daniels seconded the motion. The motion passed unanimously. The meeting adjourned at 7:45 p.m.

APPROVED BY:

Jack Van Wye
Chairperson

SUBMITTED BY:

Beth Escobar
Senior Planner

Director's Report

Agenda Item: Department Update
Community Development Department

Staff Contact: Jodie Filardo

Meeting Date: September 18, 2012

1. **Crossroads at Mingus:** PTM Enterprises continues to pursue ratification signatures from lot owners who purchased their property previous to the plat amendment. Steve Biasini is working on the site plan for the park at Tract 'F'. The park design will need to go before the Design Review Board in a public hearing for approval. The water and wastewater systems are in the final stage of review prior to being accepted into the Town's systems.

2. **Mountain Gate Subdivision:** A draft revised development agreement was submitted to BC Land Group in mid-August. They are reviewing the revisions and staff anticipates a meeting before the end of September to begin negotiation regarding some of the points of the agreement.

   Community Development staff are working on a project scope for the acquisition of the private property needed to complete the connection of Centerville Road to SR 89A. This project is tied to the overall development of Mountain Gate.

   A neighborhood listening session is scheduled in Centerville at the Centerville Park on Monday, September 24 from 5:30 – 7:30 PM to discuss emergency access for this subdivision. This meeting is being held in anticipation of the completion of the Centerville Road extension, and is an opportunity for the neighborhood to determine whether a connection into the Centerville neighborhood should be part of the road extension, or whether the emergency access supplied off of Company Hill Road is sufficient.

3. **Economic Development:** Staff met with a representative of APS to identify locations in Town where 3-phase electrical power is available. This information will be added to the GIS mapping database.

4. **Su Casa:** The owners of Su Casa requested an amendment to their Conditional Use Permit granted in March of 2006. This CUP allows for a Flea Market on either Saturday or Sunday and a Farmers Market one evening a week, either Tuesday or Wednesday. The Flea Market has been ongoing, but they have never established the Farmers Market. They requested to change the day of the Farmers Market to Saturday. Section 5-11 of the Zoning Code provides the regulations for modification

to existing CUPs. Major changes to a site plan are required to go back to the Planning Commission for approval. However, this Section does not address modifications to details of the actual use, such as a change in days and times. The Community Development Director therefore determined this request could be approved at an administration level. However, if any issues arise related to the change in date, the applicant would be required to go before the Planning Commission for review of the change. The Farmers Market was held on August 25 and September 8, in conjunction with the Concerts in the Park. Staff did not observe any problems or issues during these events.

5. **AZ Smart Power:** A community event to recognize Clarkdale's participation in the AZ Smart Power program is tentatively scheduled for September 26.

6. **Wireless Cell Tower:** In response to a request from Clear Blue Service, representatives of AT & T, asking for a determination regarding placement of a wireless cell tower on the Spirit of Joy property, staff determined a wireless facility is neither a permitted nor a conditional use in this zoning district as this property is zoned R1-Single Family Residential. A formal letter was issued to that effect. Clear Blue Services has 150 days to appeal this decision to the Board of Adjustment.

To: The Town of Clarkdale
Mary Ellen Dunn
Finance Department

From: Karen Farrington Daniels
1565 N Cholla Lane
Clarkdale AZ 86324

Re: Planning Commission

Thank you for offering me a chance to be considered for another term on the Planning Commission. However, I think that it is time that I focus on a few other activities and facets of my life that I have neglected. After the final phase of our home construction is completed, which has also taken a great deal of my time, I plan to return to my artwork and completing several writing projects that have been waiting for my full attention.

During the past five years or so I have served on two Plan Update focus groups, the 2012 Town Plan Update Committee, one term on the Board of Adjustment and this past term on the Planning Commission.

I would like to give someone else in the community the opportunity to serve on the Planning Commission in my place. I am sure that there will be plenty of interested parties willing to serve the town. If, however, after the end of the application process, the Commission has not gotten a full number of qualified applicants, I would possibly consider serving for another term.

Sincerely,

Karen F. Daniels

Karen F. Daniels

Cc. Beth Escobar
Community Development

Staff Report

Agenda Item: Discussion regarding proposed changes to Chapter 3: Zoning Districts of the Town of Clarkdale Zoning Code

Staff Contact: Beth Escobar

Meeting Date: September 18, 2012

Background:
At the June 19, 2012 meeting the Planning Commission began a discussion regarding adding agricultural uses to residential zoning districts. The impetus behind this consideration is twofold; first as a response from specific requests from property owners who are interested in having vineyards on their property, and second, the desire to support local food production. The Commission directed staff to develop a draft ordinance allowing agricultural uses in residential zones and to include a tiered approach.

In preparation for developing this draft ordinance, staff reviewed the zoning codes of Cave Creek and Flagstaff, Arizona. Both of these communities have recently adopted all new zoning ordinances and each included an expanded agricultural component.

In December 2011, the Town of Cave Creek adopted a completely new Zoning Ordinance. Part of the revisions included amending its code to permit agricultural uses in commercial districts. These uses were previously not addressed by their ordinance. However, they also created a new zoning district 'Desert Rural' where ranching activities and the raising of livestock are permitted in residentially zoned areas.

Flagstaff emphasizes urban agriculture in its new zoning code, adopted in June of 2012. Community gardens are permitted by right in residential areas. Farmers Markets are permitted by right in commercial districts.

Staff was unable to find any Arizona community where agricultural used are permitted by right in residential zones. In staff's opinion, this doesn't mean agricultural uses are not appropriate in residential areas. Just as Cave Creek's recognition of its ranching history was incorporated into their new zoning ordinance, Clarkdale's agricultural history may be supported by the Town's zoning code.

In the draft ordinance attached to this staff report, staff tried to balance the benefits of allowing agricultural uses in residential districts which include the support of local food production and retention of open space which has less of an impact as rooftops on the Town's infrastructure; while minimizing the impact of agricultural uses on existing and future residential neighborhoods.

Staff Report

Changes to the code will need to be made to Section 2, Definitions, Section 3, Zoning Districts, Section 5, Conditional Use Permits, and Section 11, Site Plan Review.

Staff is proposing the following amendments:

1. Non-commercial agricultural uses shall be permitted by right on residentially zoned property on areas of less than ½ acre.
2. Commercial agriculture, defined as the growth and harvesting for sale, in residential zones shall be permitted on property greater than ½ acre with a conditional use permit.
3. Community gardens and Farmers Markets shall be allowed in residential zones with a conditional use permit.
4. Indoor sale of bulk agricultural products shall be a permitted use in the Central Business District, and Commercial District. Staff is recommending this language be added specifically to the Central Business District to encourage use of existing buildings in the downtown area as a farmer's coop.
5. Community Gardens, Farmer's Markets and Agribusinesses shall be permitted with a Conditional Use Permit in the Central Business, Commercial and Industrial Zoning Districts.

Staff is recommending the use of the conditional use permit process to guide development of agricultural uses and is suggesting language to promote sustainable agriculture by minimizing water use and impact to the environment. Staff is recommending specific language be added to the required conditions for a use permit, including:

- Requiring all agricultural uses connect to the Town's water system. Because Clarkdale is not in an Active Management Area, we cannot prohibit the drilling of wells. Wells impact the same water table used by the Town to provide water to residents. We do not want to encourage the drilling of more wells in the area by encouraging agricultural uses.
- Requiring agricultural uses include a rainwater harvesting component.

As part of the conditional use permit findings, the Commission may choose to allow pesticide and herbicide uses per standards established by the Environmental Protection Agency, or not allow the use of any pesticides. Crops can be grown without pesticides, since this is a requirement of the 'organic' label; however, this is more labor intensive and typically adds to the cost of the product.

In commercial zoning districts, starting with the Central Business District, staff is suggesting community gardens, farmers markets, and agribusinesses be allowed with a Conditional Use Permit so environmental impact may be monitored. Staff is also suggesting site plan review

be required for these uses to monitor impact to surrounding properties and the community. The permit process allows staff, the Commission and surrounding property owners the opportunity to participate in the development of the project and mitigate any potential hazards or issues.

Staff would also like the Commission to consider two specific questions regarding these code amendments:

- Should a residential use, such as single-family residence used as a caretaker's home, be required to be established on property to be used for agriculture in residential zoning districts? In staff's opinion, a residential use maintains the flavor of a neighborhood, and also assumes there is someone on the site to monitor the property.
- If a conditional use permit is granted to agriculture in a residential zone, should the property be restricted from subdivision for a certain time period? Agricultural uses help preserve open space, which may be seen as a benefit to surrounding properties. Since agricultural uses are not a 'by right' use in residential zones, requiring a time period of five to ten years before property can be subdivided helps retain a community benefit and ensures the property owner is sincere in their pursuit of an agricultural use.

Please note, the above code change recommendations are for agricultural uses only and do not include the use of residential property for livestock production or bee keeping. Staff believes these uses on residential property need to be examined carefully and we plan to bring this issue forward in a separate worksession.

Recommendation: Staff is requesting the Planning Commission direct staff as to whether to continue crafting a revision to the zoning code to include agricultural uses. Staff would recommend the next review of this proposed changes be done in a public hearing. Staff would like to invite specific individuals who support agricultural uses to provide comments at this next meeting.

Attachments:

1. Draft Ordinance Changes
2. American Planning Association Policy Guide on Agricultural Land Preservation

Staff Report

Draft Changes to the Town of Clarkdale Zoning Code to permit Agricultural Uses

Section 2-1 Definitions:

Agribusiness: An enterprise deriving a significant portion of its revenues from sales of agricultural products or sales to agricultural producers.

Agriculture: the growth and harvesting of flowers, fruits, and vegetables.

Community Garden: Land gardened by a group of people to produce flowers, fruits and/or vegetables.

Farmers Market: An outdoor, periodic event, where vendors gather to sell agricultural products and local food products.

Section 3 Zoning Districts

Section 3-1 Single Family Residential (R1); Section 3-2 Single Family Residential (R1A); Section 3-3, Single Family Residential Limited (R1L), Section 3-4 Single Family and Limited Multiple Family Residential (R2); Section 3-5 Multiple Family Residential (R3); Section 3-6 Manufactured Home Residential (R4); Section 3-7 Manufactured Home Residential Alternate (R4A) and Section 3-8 Suburban Residential (RS3) add the following language:

A. Principal Use Permitted
   Non-commercial agricultural uses on property less than or equal to ½ acre, including cultivation of grapes and distilling of wine for personal use. Retail sales of agricultural products are not permitted.
B. Conditional Uses Permitted: (Requires a use permit).
   Commercial agricultural uses on property larger than ½ acre is size
   Agriculture/farming connected with a Bed and Breakfast establishment
   Agriculture/farming connected with a residential subdivision
   Community Gardens
   Farmers Markets

Section 3-9 Central Business District (CB) add the following language:

A. Principal Uses Permitted
   17. Indoor retail sale of bulk agricultural products

C. Conditional Uses Permitted:
5. Community Gardens
6. Farmers Markets

Section 3-11 Commercial (C) add the following language:

A. Principal Uses permitted:
20. Indoor retail sale of bulk agricultural products

C. Conditional Uses Permit:
7. Farmers Markets
8. Community Gardens
9. Agribusiness, including the refining and distribution on site of agricultural products. Refining and sales area must be in a permanent structure.

Amend Section 5-6 Conditional Use Permit

Add the following language

14. A conditional use permit for agricultural uses shall include:

a) A dust control plan.
b) Connection to Town of Clarkdale water system.
c) Use of reclaimed or raw water where available.
d) A rainwater harvesting system component.
e) All agricultural uses must be setback 25 feet from adjoining property lines when abutting residentially zoned property.
f) Use of pesticides and herbicides must follow EPA standards and include an integrated pest management (IPM) component
   Or
   Use of pesticides and herbicides are not permitted.
g) Irrigation and drainage on site must follow EPA Best Management Practices. Spray irrigation is not permitted.
h) Runoff of irrigation must be retained on site.

Staff Report

Section 11-9 Purpose and Applicability for Site Plan Review

Amend the language in A.4 to read:
The establishment of a new commercial or industrial use even if no buildings or structures are proposed, including uses such as *agribusinesses, farmers markets, community gardens.*

Strike the language in A.B.3 which exempts agricultural activities from site plan review.

Staff Report

Policy Guide on Agricultural Land Preservation

Adopted by the Chapter Delegate Assembly April 25, 1999
Ratified by the APA Board of Directors April 26, 1999

Summary of Key Points

- Critical agricultural land is being developed at a rate higher than population growth;
- The nature of agricultural production is changing and appropriate growth management techniques must recognize, and be proactive to these changes;
- Most traditional zoning tools have minimal efficacy to protect against the development of agricultural lands;
- Communities must develop, implement and enforce multiple mechanisms for the effective preservation of productive agricultural land (i.e. urban growth boundaries, purchase of development rights, exclusive agricultural zoning);
- Agricultural productivity must be allowed to be a viable economic activity;
- Farming is a business that also has environmental, public and aesthetic implications;
- Agricultural land should be protected and preserved in large contiguous blocks in order to maintain a "critical mass" of farms and agricultural land;
- Agricultural land preservation must be distinguished from open space preservation and must be viewed as protecting commercially viable farms and productive agricultural land which *incidentally* provides open space amenities;
- Right-To-Farm provisions/protections must be included in agricultural land preservation programs, plans and policies;
- Environmental stewardship must be integral with effective agricultural land preservation programs, plans and policies (i.e. erosion management, ground water protection, buffering, etc.);
- Taxation strategies should be developed to discourage the conversion of agricultural land to other uses;
- The extension of *urban* services into agricultural areas should be discouraged;
- Implementation of agricultural land preservation programs, projects and policies are best implemented and enforced when they are done so at the local level with technical and financial support from state and federal sources; and
- The viability of the local economy, especially a strong commercial "core" is essential to the long-term preservation of agricultural lands.

Issues and General Statements

At the moment, there is more U.S. agricultural land than necessary to meet market demands. But over the long term, as populations in the U.S. and abroad continue to

grow rapidly, there will be a greater need to protect the remaining finite amount of good agricultural land.

Agricultural land is steadily being lost through both non-farm development and soil erosion. This Policy Guide addresses the former problems: urban development on good agricultural land that could be accommodated on less productive land. In this Policy Guide, good agricultural land is referred to as "Important Agricultural Land," which has been defined in the Farmland Preservation Policy Act of 1981 as consisting of either prime agricultural land, unique agricultural land, or other agricultural land that is of statewide or local importance.

Even when metropolitan areas are not increasing in population, much scattered development occurs in their vicinity. Much of this scattered development is on Important Agricultural Land, whose physical characteristics are generally excellent for building.

Scattered development in farming areas removes agricultural land from production both directly and indirectly. Development directly removes the agricultural productivity on which it is built. Indirectly, it may force nearby farmers out of production by traffic, trespassing, and pilferage by non-farm residents, by their complaints about dust, smells, sprays, and noise, and especially by causing a general rise in land values, and higher property taxes.

All states have recognized the need to preserve good agricultural land and have provided tax and other incentives for farmers to continue farming. But only a few, such as Wisconsin, have linked the incentives to controls preventing development. The federal government, and most states (Oregon is the outstanding exception) have inconsistent land use and infrastructure policies that generate pressures for development in farming areas.

Findings

- America's farmers own the majority of the nation's privately held land;
- The average age of America's farmers is over 50 years old;
- About half of the nation's food supply comes from metro and metro-adjacent counties. These counties are where most of the projected population growth will occur;
- The population of the United States is projected to increase to as much as 393 million people by the year 2050, up from 262 million in 1995;
- Recent land use trends have shown a rate of increase in land development that far exceeds the rate of population growth. The result has been sprawling residential, commercial, and industrial development that has often occurred on agricultural land;
- Farming is a business that also provides many public benefits, including open space, wildlife habitat, and ground water re-charge;
- Those states and local governments that have achieved a measure of success in agricultural land preservation employ a coordinated package of techniques, including: agricultural zoning, preferential taxation of agricultural land, right-

to-farm laws, purchase or transfer of development rights, and urban growth boundaries or urban service areas;

- There are about 240 million acres of prime agricultural land in America. Roughly one-quarter of this land is located within metropolitan areas;
- The United States loses anywhere from several hundred thousand acres to a million acres of agricultural land to other uses each year;
- Although the United States currently has an abundance of agricultural land and an abundant supply of food, this could change over the next 50 years, given national and global population and development trends;
- Agricultural land loss is especially important at the local and regional levels in many parts of the United States;
- Agricultural land should be protected and preserved in large contiguous blocks in order to maintain a "critical mass" of farms and agricultural land. The critical mass will enable farm support businesses to remain profitable and sustain local and regional agricultural economies;
- Agricultural land preservation must be distinguished from open space protection. The purpose of protecting agricultural land should be to protect commercially viable farms and agricultural land which incidentally provide open space; and
- The preservation of agricultural land and farming is dependent on the strength of the local agricultural economy. A critical mass of agricultural support activity must be preserved to help make farming a viable business enterprise.

Staff Report

Agenda Item: A public hearing to review proposed changes to the Subdivision Regulations, including deletion of Chapter 12 of the Town Code in its entirety, and adoption of a completely revised version of the Subdivision Regulations as Chapter 12 of the Town Zoning Code.

Staff Contact: Beth Escobar

Meeting Date: September 18, 2012

Background:
Subsequent to the Planning Commission's final review of the draft Subdivision Ordinance in May, the Town Council reviewed the draft in three separate worksessions. The Council recommended the following changes:

- Section 12-3-3 Landscape Requirements (page 22). The Mayor requested changes to some of this language.
- Section 12-4-5.D.10.b (page 50) was added allowing developers to propose alternative methods of providing construction assurances, other than the letter of credit and cash deposit listed in 'a' of this Section. The Council wanted to leave the opportunity available to consider alternative methods for providing assurance.
- Section 12-8, Golf Course Water Use Regulations, has been deleted from the Subdivision Regulation and will be adopted into Section 4 – General Provisions of the Zoning Code. The Council felt that this Section, since it is not exclusive to subdivision development, should be in another area of the Code.

Recommendation: Staff is requesting that the Planning Commission direct staff to bring the revised draft forward to Town Council for adoption.

Attachments:

1. Revised Draft Subdivision Ordinance

ORDINANCE #

AN ORDINANCE OF THE TOWN OF CLARKDALE, ARIZONA, CREATING CHAPTER 12 – SUBDIVISION REGULATIONS OF THE ZONING CODE OF THE TOWN OF CLARKDALE, REPEALING CONFLICTING ORDINANCES AND PROVIDING FOR SEVERABILITY.

BE IT ORDAINED BY THE MAYOR AND COMMON COUNCIL OF THE TOWN OF CLARKDALE, ARIZONA THAT:

SECTION 1: Chapter 12 – Subdivision Regulations

ZONING CODE CHAPTER TWELVE

Contents

ARTICLE 12-1 GENERAL PROVISIONS 5
Section 12-1-2 Town Development Policy 5
Section 12-1-3 Purpose and Intent 5
Section 12-1-4 Severability 5
Section 12-1-5 Saving Provision 6
Section 12-1-6 Repealer 6
Section 12-1-7 Amendments 6
Section 12-1-8 Subdivision Amendments 6
Section 12-1-9 Re-subdivision of Land 6
Section 12-1-10 Abandonment (Reversion to Acreage) 6
Section 12-1-11 Private Agreements 8
Section 12-1-12 Authority and Applicability 8
Section 12-1-13 Jurisdiction 8
Section 12-1-14 Prohibition Against Circumvention of Regulations 8
Section 12-1-15 Violations and Penalties 8
Section 12-1-16 Subdivision Committee 8
Section 12-1-17 Adoption of Figures 9
Section 12-1-18 Processing Fee Schedule 9
Section 12-1-19 Hardship 9

Section 12-1-20 Waiver 10
Section 12-1-21 Water Adequacy (created Ordinance #314 Effective 9/12/08) 10
ARTICLE 12-2 DEFINITIONS 12
Section 12-2-1 Usage 12
Section 12-2-2 Words and Terms Defined 12
ARTICLE 12-3 SUBDIVISION DESIGN PRINCIPLES AND STANDARDS 21
Section 12-3-1 General 21
Section 12-3-2 Reservation of Land for Public Use 21
Section 12-3-3 Landscape Requirements 22
Section 12-3-4 Street Location and Arrangement 22
Section 12-3-5 Dedicated Access 24
Section 12-3-6 Street Classification 25
Section 12-3-7 Block Design 25
Section 12-3-8 Lot Planning 26
Section 12-3-9 Street Naming 27
Section 12-3-10 Easement Planning 27
Section 12-3-11 Condominium Development-Air Rights Planning 27
ARTICLE 12-4 SUBDIVISION PLATTING PROCEDURES AND REQUIREMENTS 29
Section 12-4-1 Outline of Subdivision Procedures 29
Section 12-4-2 Stage I - Pre-Application Conference 30
Section 12-4-3 Stage II - Preliminary Plat 31
A. ZONING: 31
B. SANITARY SEWAGE, REFUSE DISPOSAL AND WATER SUPPLY: 31
C. OWNER'S AUTHORIZATION: 31
D. PRELIMINARY PLAT SUBMISSION: 32
E. FORM OF PRESENTATION FOR PRELIMINARY PLAT: 33
F. PRELIMINARY PLAT REVIEW: 36
G. RESPONSIBILITIES OF THE COMMISSION: 36
H. APPEALS: 37
I. PUBLIC HEARING BEFORE THE COUNCIL AND NOTICE: 38
J. RESPONSIBILITIES OF THE COUNCIL: 38

K. COUNCIL REJECTION: 39

L. SIGNIFICANCE OF PRELIMINARY PLAT APPROVAL: 39

Section 12-4-4 Stage III - Subdivision Technical Review 40

The "Technical Review" stage is designed for the Town Engineer to approve all details of the engineering plans and specifications for public improvements before recommending the subdivider proceed with Final Plat procedures. 40

Section 12-4-5 Stage IV - Final Plat, Recording and Post Approval 41

A. Filing of Final Plat: 41

B. Form of Presentation for the Final Plat: 42

C. Final Plat Review: 47

D. Final Plat Approval, Recording and Post Approval: 48

ARTICLE 12-5 MINOR SUBDIVISION 53

Section 12-5-1 Minor Subdivision 53

Section 12-5-2 Outline of Minor Subdivision Procedures 53

Section 12-5-3 Minor Subdivision Preliminary Plat Review: 53

Section 12-5-4 Responsibilities of the Subdivision Committee: 54

Section 12-5-5 Appeals 55

Section 12-5-6 Significance of Minor Subdivision Plat Approval 56

ARTICLE 12-6 MINOR LAND DIVISIONS AND LOT LINE ADJUSTMENTS 57

Section 12-6-1 Purpose of Minor Land Divisions 57

Section 12-6-2 Applicability 57

Section 12-6-3 General Standards 58

Section 12-6-4 Application Requirements 58

Section 12-6-5 Application Process 60

Section 12-6-6 Conspiracy to Subdivide 62

Section 12-6-7 Purpose of Lot Line Adjustment 62

Section 12-6-8 General Standards 62

Section 12-6-9 Application Requirements 63

Section 12-6-10 Application Process 64

Section 12-6-11 Roadway Standards for Minor Subdivisions 65

ARTICLE 12-7 PUBLIC IMPROVEMENT STANDARDS 66

Section 12-7-1 Purpose 66

Section 12-7-2 Improvement Plans 66

Section 12-7-3 Construction and Inspection 66

Section 12-7-4 Required Improvements 67

Exhibit A - Residential Collector 72

Exhibit B - Residential Local 73

Exhibit C - Rural Collector 74

Exhibit D -Rural Local 75

Exhibit E -Rural Lane 76

Exhibit F- Private Street 77

Exhibit G- Cul-de-sac 78

Figure 1 TRIP GENERATION RATES BY LAND USE CATEGORIES 79
Figure 2 STREET CLASSIFICATION AND MINIMUM DESIGN STANDARDS 80
Figure 3 STREET CURVE AND DESIGN DATA 81
Figure 4 ROADWAY STANDARDS FOR MINOR SUBDIVISIONS 82
Figure 5 SIGNATURE BLOCKS FOR MYLARS 83

ARTICLE 12-1 GENERAL PROVISIONS

Section 12-1-1 Title

This ordinance shall be known as the "Subdivision Regulations of the Town of Clarkdale."

Section 12-1-2 Town Development Policy

The Town of Clarkdale's development policy is reflected in the Town's General Plan, Goal 9-1 'GROWTH AREA', and is stated as follows:

GOAL 9.1

Direct and sustain growth and expansion in areas of the Town that can support concentration of a variety of uses and are particularly suitable for multimodal transportation and infrastructure expansion and improvements.

Section 12-1-3 Purpose and Intent

The purpose of these Regulations is to provide for the orderly growth and harmonious development of the Town.

The provisions of these Regulations shall be held to be the minimum requirements for the promotion of the public health, safety, and general welfare.

In its interpretation and application, the provisions of these Regulations are intended to provide a common ground of understanding and an equitable working relationship between public and private interests to the end that both independent and mutual objectives can be achieved in the subdivision of land.

The provisions of these Regulations shall be administered to ensure orderly growth and development, and shall supplement and facilitate the provisions in the General Plan, Zoning Code, Official Maps and the Capital Improvement Plan.

Section 12-1-4 Severability

If any part or provision of these Regulations or application thereof to any person or circumstances is adjudged invalid by any court or competent jurisdiction, such judgment shall be confined in its operation to the part, provision, or application directly involved in the controversy in which judgment shall not affect or impair the validity of the remainder of these Regulations or the application thereof to other persons or circumstances.

Section 12-1-5 Saving Provision

These Regulations shall not be construed as abating any action now pending under, or by virtue of, prior existing Subdivision Regulations, or discontinuing, abating, modifying, or altering any penalty accruing or about to accrue, or as affecting the liability of any person, firm or corporation, or as waiving any right of the Town under any section or provision existing at the time of adoption of these Regulations, or vacating or annulling any rights obtained by any person, firm or corporation, by lawful action of the Town, except as shall be expressly provided for in these Regulations.

Section 12-1-6 Repealer

Upon the adoption of these Regulations according to law, any Subdivision Regulations adopted previously are hereby repealed in their entirety. Except that any and all subdivision plans, minor land divisions and improvement plans submitted to the Commission for evaluation prior to the adoption of these Regulations shall be evaluated under the guidelines of the then existing regulations.

Section 12-1-7 Amendments

For the purpose of promoting the public health, safety and general welfare, the Council may from time to time amend upon the recommendation of the Planning Commission the provisions imposed by these Subdivision Regulations in the manner prescribed by law.

Section 12-1-8 Subdivision Amendments

No changes, erasures, modifications or revisions shall be made in the Final Plat after approval of the plat has been given by the Council.

Section 12-1-9 Re-subdivision of Land

For any change in a map of an approved or recorded subdivision plat, if such change affects any name, street layout shown on such map, or area reserved thereon for public use, or any lot line, or any improvements, such change(s) shall be approved by the Council by the same procedures and regulations as for a new subdivision. The Council may waive these procedures for minor revisions of lot lines between two (2) neighboring lots in a platted subdivision when no other change of the Final Plat is involved and the two (2) new lots conform to all Town Codes. If lots within an approved subdivision have been sold to individual property owners, the Town may require, at the Town's discretion, signatures from all property owners within the subdivision be obtained and placed on the revised plat to be recorded.

Section 12-1-10 Abandonment (Reversion to Acreage)

A. If no lots in a subdivision, for which a final map has been approved and

recorded, have been sold within thirteen (13) months from the date of recordation and if all of the improvements have not been made within thirteen (13) months of recordation, the Council may, on its own motion, hold a public hearing after notice, to determine whether the approval and recording of such final map should be revoked. Such revocation shall be in accordance with the Arizona Revised Statutes.

B. If no lots in a subdivision for which a final plat has been approved and recorded have been sold, the property owner(s) of all lots within a subdivision may submit an application to the Director for Reversion to Acreage. This application shall include a survey and legal description presenting the property as reverted from the platted subdivision. Upon Town Council approval of the reversion and recording of the new property description the Public Works Director will determine if any posted assurances (see Section 12-4-5-D) may be released. An application fee of an amount established by the Town Council shall be paid at the time of filing. An application for revocation of all or any part of a subdivision shall be evaluated by the Community Development Department prior to any consideration by Town Council.

1. Correlation with General Plan of the Town.

2. Correlation with proposed development in adjacent areas.

3. Effect of such action on nearby existing development.

4. Access to all remaining parcels.

C. Any other actions applicable to the above process and permitted by State laws are permissible.

D. Applications to abandon streets or easements shall be made pursuant to Arizona Revised Statutes and shall be carried on separately and simultaneously with any procedure to abandon a subdivision or revert it to acreage.

E. Upon submittal of an application to abandon a subdivision and cause same to revert to acreage, Staff shall distribute the request to the following for review and comment: Town Engineer, the County Assessor, County Treasurer, the County Health Department, and any utility that has facilities on the property proposed to be abandoned.

F. Upon receipt of reviewing comment(s), if any, the Commission shall schedule the matter for public hearing before the Commission to formulate

a recommendation to the Council.

Section 12-1-11 Private Agreements

The provisions of these Regulations are not intended to abrogate any easement, covenants or other existing agreements which are more restrictive than the provisions of these Regulations.

Section 12-1-12 Authority and Applicability

These Regulations shall be governed by the Arizona Revised Statutes, Title 9, governing the division and platting of land pursuant thereto.

All subdivisions, minor subdivisions or minor land divisions within the Town shall comply with these Regulations.

Section 12-1-13 Jurisdiction

These Regulations apply to all subdivisions, minor subdivisions and minor land divisions within the incorporated limits of the Town of Clarkdale.

Section 12-1-14 Prohibition Against Circumvention of Regulations

No person, firm, corporation, or other legal entity shall hereafter sell or offer for sale any lot, piece, or parcel of land which is within a subdivision as defined in Section 12-2-2 of these Regulations without first having recorded a plat thereof in accordance with the provisions of these Regulations.

Section 12-1-15 Violations and Penalties

Any person, firm, corporation, or other legal entity who violates any provision of these Regulations as hereby amended, shall be guilty of a Class 1 misdemeanor, and, upon conviction thereof, may be punished by a fine of not more than one thousand dollars ($1,000.00), or by imprisonment for a period not to exceed six (6) months, or by both such fine and imprisonment. Each day that a violation continues shall be a separate offense punishable as herein above described.

Section 12-1-16 Subdivision Committee

A. The "Subdivision Committee" (as defined in Section 12-2-2) is hereby established and shall consist of the following members or their duly authorized representatives:

1. Director of Community Development

2. Director of Public Works and/or Utilities Departments

3. Planning Commission Chair or designee

4. Town Engineer

5. Police Department

B. Representatives of other public agencies may be requested to participate on a cooperative basis at the request of the Director of Community Development, but shall not be members.

C. It shall be the duty of the "Subdivision Committee" to review all Minor Subdivision Plat applications.

D. The "Subdivision Committee" shall meet as often as necessary, pursuant to the Arizona Attorney General Opinion 75-7 regarding Open Meeting Law.

Section 12-1-17 Adoption of Figures

All figures within these Regulations are hereby adopted and fully incorporated herein as a part of these Regulations.

Section 12-1-18 Processing Fee Schedule

All submissions shall be accompanied by a filing fee according to the fee schedule as recommended by the Commission and approved by the Council.

In the event the Staff, the Commission or the Council find it necessary to use the professional services of any person, either in their regular employ or retained outside of their regular employ, in connection with their examination, approval, inspection or acceptance of any subdivision; said services shall be paid for by the subdivider. The Council may approve a fee schedule that incorporates standard professional costs and in such case a subdivider may only have to pay for excessive costs and the standard fee.

A late fee of one and one-half percent (1 ½ %) per month will be charged on all past due fees. The Final Plat will not be recorded until all fees are paid.

Section 12-1-19 Hardship

The Commission may recommend and the Council may authorize variances from the terms of these Regulations, where an exceptional or extraordinary situation or condition of a tract of land causes the strict application of any regulation enacted herein to result in peculiar and exceptional practical difficulties to, or undue hardship upon the subdivider. Such variance may be given,

provided such relief may be granted without detriment to the public good and without impairing intent and purposes of these Regulations.

Section 12-1-20 Waiver

The Commission may recommend waiver, and the Council may waive, any provision of these Regulations insofar as they affect a public use or purpose. No waiver may be granted unless the Council finds that it is in the best interest of the public, without impairing the intent and purpose of these Regulations. The extent and duration of the waiver shall be stated at the time of the waiver.

Section 12-1-21 Water Adequacy (created Ordinance #314 Effective 9/12/08)

A. The Common Council shall not approve a final plat for a subdivision, as defined in A.R.S. § 32-2101, unless one of the following applies:

1. The Director of the Arizona Department of Water Resources has determined that there is an adequate water supply for the subdivision pursuant to A.R.S. § 45-108, and the subdivider has included the report with the plat.

2. The subdivider has obtained a written commitment of water service for the subdivision from a city, town, or private water company designated as having an adequate water supply by the Director of the Arizona Department Water Resources pursuant to A.R.S. § 45-108.

B. The requirements of Subsection 12-1-21 (A) do not apply to:

1. A proposed subdivision that the Director of the Arizona Department of Water Resources has determined will have an inadequate water supply pursuant to A.R.S. § 45-108, if the Director grants an exemption for the subdivision pursuant to A.R.S. § 45-108.2 and the exemption has not expired, or the Director of the Arizona Department of Water Resources grants an exemption pursuant to A.R.S. § 45-108.3.

2. A proposed subdivisions that received final plat approval from the Town before the requirement for an adequate water supply became effective in the Town, if the plat has not been materially changed since it received the final plat approval.

a. If changes were made to the plat after the plat received the final plat approval, the Director of the Arizona Department of Water Resources shall determine whether the changes are material.

C. If the Council approves a final plat for a subdivision pursuant to 12-1-21 (A), the Council shall note on the face of the plat that the Director of the Arizona Department of Water Resources has reported the subdivision has an adequate water supply, or the subdivider has obtained a commitment of water services for the proposed subdivision from a city, town or private water company designated as having an adequate water supply pursuant to A.R.S. § 45-108.

D. If the Council approves a final plat for a subdivision pursuant to an exemption authorized by 12-1-21 (B) (2) or granted by the Director of the Arizona Department of Water Resources pursuant to A.R.S. § 45-108.2 or to A.R.S. § 45-108.3, the Council shall;

1. Give written notice of approval to the Director of the Arizona Department of Water Resources and the Director of Environmental Quality.
2. Include on the face of the plat a statement describing the exemption under which the plat was approved, including a statement that the Council or the Director of the Arizona Department of Water Resources, whichever applies, has determined that the specific conditions of the exemption were met.
3. If the Director of the Arizona Department of Water Resources subsequently informs the Council that the subdivision is being served by a water provider that has been designated by the Director as having an adequate water supply pursuant to A.R.S to A.R.S. § 45-108, the Council shall record in the County Recorder's office a statement disclosing the fact.

ARTICLE 12-2 DEFINITIONS

Section 12-2-1 Usage

For the purpose of these Regulations, certain words and terms are defined as follows: Words used in the present tense include the future; words in the singular number include the plural, and vice versa; the word "shall" is mandatory and not discretionary, and the word "may" is permissive; the word "person" includes individuals, partnerships, corporations, clubs or associations; the word "structure" includes the word "building".

Section 12-2-2 Words and Terms Defined

Abandonment: When the Council by proper action and public hearings abrogates all rights to any lots, streets, public ways, easements, or right-of-ways.

Access, Legal: Means by which pedestrians and vehicles have ingress and egress, to and from, a lot or parcel, by way of either a dedicated public street or an easement granting ingress/egress to any lot or parcel.

ADEQ: The Arizona Department of Environmental Quality.

ADOT: The Arizona Department of Transportation.

ADT: Average Daily Traffic. The average number of motor vehicles per day that pass over a given point.

Air Rights: A free interest in a three-dimensional air space in relation to a specified surface property.

Alley: A public right-of-way used to provide secondary vehicular access to properties that abut it.

Arterial Route: Provides for through traffic with limited access to abutting properties and includes major streets or highways having regional continuity.

As-Built Plans: Construction/engineering plans prepared after the completion of construction by the engineer of record and in such a manner as to accurately identify and depict the location of in place improvements.

Assurance: A guarantee that the specific improvements and services will be accomplished. This must be in the form of irrevocable letter of credit, a certificate of deposit or a certified check for

construction of improvements. Utility service assurances may be provided by letter from water, electric, gas, communication and other appropriate utility companies to guarantee improvements.

Bicycle Lane: A lane at the edge of a roadway reserved and marked for the exclusive use of bicycles.

Block: A piece or parcel of land or group of lots entirely surrounded by public right-of-way, streams, railroads or parks, or combination thereof.

Cartway: The total surface area (either paved or graveled) within the easement of right-of-way for vehicular traffic and/or parking.

Certificate: A formal written statement intended as an authentication of the fact(s) asserted and set forth, under seal of a notary or registered professional.

Channel: The bed and banks of a natural or man-made stream which convey the constant or intermittent flow of the stream.

Circulation Plan: That portion of the General Plan designating and describing the existing and future street system of the Town.

Collector Street: Provides for traffic movement between and within neighborhoods and between arterial and local streets and access to abutting property.

Commission: Town of Clarkdale Planning Commission is the advisory agency of the Council, has the full power and authority to investigate any and all matters pertaining to a proposed subdivision, to make findings of fact in relation thereto and as defined in **Section 17-1-5** of the Town Code of Clarkdale.

Common Open Space: Land within or related to a development, not individually owned or dedicated for public use, which is designed and intended for the common use or enjoyment of the residents of the development. It may include complementary structures and improvements. Common Open Space does not include right-of-ways.

Conditional Approval: An affirmative action by the Commission and/or Council indicating that approval will be forthcoming upon satisfaction of certain specified stipulations.

Condominium: An estate in real property consisting of an undivided interest in common in a portion of a parcel of real property, together with a separate interest in space in a residential, commercial or industrial complex located on such real property. This condominium may include cluster housing or semi-detached housing. In addition, a condominium may include separate interest in other portions of such real property.

Construction Plans: Plans, profiles, cross-sections, and other required details for the construction of improvements, prepared by an engineer, registered in the State of Arizona, in accordance with the approved Preliminary Plat and in compliance with standards of design and construction approved by the Council. Engineering plans.

Corner Lot: A lot abutting on two (2) or more intersecting streets.

Council: The Common Council of the Town of Clarkdale.

County: Yavapai County, Arizona.

Cul-de-sac Street: A local street having one end permanently terminated in a vehicular turnaround.

Dead-end Street: A street with one (1) outlet but without a permanent provision for turning around, and which may be further extended into adjoining property.

Dedication: An offer of real property by its owner(s) to the Town of Clarkdale for any general or public use.

Deed Restrictions and Protective Covenants: A written contractual agreement between two (2) or more individuals or parties setting forth rules, regulations and expectations surrounding the use of subdivided or unsubdivided property.

Density: A ratio expressing the number of dwelling units per acre.

Design Storm: The rainfall event of specific frequency and duration which produces the design flow.

Detention Basin: A man-made or natural water collector facility designed to collect surface and subsurface water in order to impede its flow and to release the same gradually at a rate not greater than that prior to the development of the property, into natural or man-made outlets.

Development: The utilization of land for public or private purpose involving property improvement or the change of land use.

Director: The Director of Community Development or person designated by the Town Manager who is responsible for planning functions.

Driveway: A vehicle access, paved or unpaved, that allows vehicle access from a street to a structure or other facility.

Easement: A legal interest in land granted by the owner to another person or the general public,

which allows that person, or the general public, the use of all or a portion of the owner's land, generally granted for a stated purpose including, but not limited to, access or utility placement.

Engineer of Record: A professional engineer registered in the State of Arizona and employed by the owner or developer to design and/or inspect improvements.

Engineering Plans: Plans, profiles, cross-sections, and other required details for the construction of public improvements, prepared by an engineer, registered in the State of Arizona, in accordance with the approved Preliminary Plat and in compliance with standards of design and construction approved by the Council. Construction plans.

Exception: Any parcel of land which is within the boundaries of the subdivision but which is not owned by the subdivider.

Fill: A deposit of soil, rock or other material placed by a person.

Final Approval: Approval of the Final Plat by the Council, as evidenced by certification on the plat by the Town Engineer and signed by the Mayor of the Town of Clarkdale attested by the Town Clerk which constitutes authorization to record a plat when improvement plans have been approved and an adequate assurance has been posted to guarantee the installation of the improvements.

Final Plat: A map of all or part of a subdivision providing substantial conformance to an approved Preliminary Plat, prepared by a registered professional engineer or a registered land surveyor in accordance with Section 12-3-5-D of these Regulations, as applicable, which is presented for final approval.

Flag Lot: A lot with a developable area connected to a public road by a narrow strip of land wide enough for a driveway.

Flood Plain, Delineated: That area delineated and mapped as a flood plain, as approved by Council and as shown on the National Flood Insurance Program, flood insurance maps and Yavapai County flood maps.

Frontage: That portion of a lot or parcel contiguous with a street or highway.

General Plan: The Clarkdale General Plan or parts thereof, providing for the future growth and improvement of the Town and for the general location and coordination of streets and highways, schools, parks, recreation sites, sewers, and other public facilities.

Grading: Any excavating, filling, or combination thereof that involves changing the natural drainage pattern.

Half Width Street: A half (1/2) width street constructed with one (1) edge coincident with a tract boundary which will be the future centerline of the street.

Improvements: Such street work, flood and drainage work, utilities, sewers, and other desirable facilities to be installed by the subdivider on the land for public or private streets, highways, bicycle ways, pedestrian ways, trails and easements for the general use.

Interior Lot: A lot having but one (1) side abutting on a street.

Landlocked: A lot or parcel of land with no platted public or private road frontage or no easement(s) for vehicle access and utilities.

Land Split: The division of improved or unimproved land, two and one-half (2 ½) acres or less in area that does not include a new street, into two (2) or three (3) parcels of land, for the purpose of sale or lease. A Minor Land Division.

Land Surveyor: A professional individual registered with the State of Arizona in the field of land surveying.

Local Street: Provides for direct access to residential, commercial, industrial, or other abutting land and for local traffic movements and connects to collector and/or arterial streets.

Lot: A piece or parcel of land separated from other pieces or parcels by description, as in a subdivision or on a record survey map, or by metes and bounds, for the purpose of sale, lease or separate use.

Lot Width: The width of a lot shall be:

A. If the side property lines are parallel, the shortest distance between these parallel lines.

B. If the side property lines are not parallel, the shortest distance between the side lot lines measured at the narrowest point between the required front or rear building setback line for the zoning district in which the lot is located.

Minor Land Division: The division of improved or unimproved land that does not include a new street, into two (2) or three (3) parcels of land, for the purpose of sale or lease. A land split.

Minor Subdivisions: Improved or unimproved land or lands which cannot be split in accordance with the Minor Land Division Section of the Town of Clarkdale Subdivision Regulations, that is divided for the purpose of financing, sale or lease, whether immediate or future into between four (4) and ten (10) lots, tracts or parcels of land, or the division of land that already has boundaries fixed by a recorded plat, which cannot be split in accordance with the Minor Land

Division Section of the Town of Clarkdale Subdivision Regulations, and which is divided into between two (2) and ten (10) parts. Minor Subdivision also includes any condominium, cooperative, community apartment, townhouse or similar project containing between four (4) and ten (10) parcels, in which an unsubdivided interest in the land is coupled with the right of exclusive occupancy of any unit located thereon and which cannot be split in accordance with the Minor Land Division Process that is a part of the Town of Clarkdale Subdivision Regulations.

Neighborhood Plan: A sketch plan designed by the Town to guide the platting of remaining vacant parcels in a partially built-up neighborhood so as to make reasonable use of all land, coordinate street patterns, and achieve the best possible land use relationships.

Open Space: Any parcel or area of land or water unimproved or improved and set aside, dedicated, designated, or reserved for the public or private use and enjoyment of the public or the owners and occupants of land adjoining or neighboring such open space.

Owner: Any legal entity holding title by deed to the land, or holding title as vendees under land contract or holding any other title of record.

Parcel: Real property with a separate and distinct number or other designation shown on a plan recorded in the office of the County Recorder, or real property delineated on an approved record of survey, parcel map or subdivision map as filed in the office of the County Recorder and abutting at least one (1) public right-of-way or easement determined by the Director or the Commission to be adequate for the purpose of access.

Park: An area dedicated to recreation and/or cultural and artistic opportunities, active and/or passive, as defined by the Clarkdale Town Council on February 14, 2012 and is designed to serve the residents and visitors of a neighborhood or the Town.

Pedestrian/Bicycle Way: A public walk and bicycle path dedicated entirely through a block from a street and or providing access to a school, park, recreation area or shopping center.

Planned Area Development: (PAD) An area of minimum size, as specified by ordinance, to be planned, developed, operated, and maintained as a single entity containing one (1) or more structures to accommodate commercial, industrial, office or residential uses or combination thereof, and appurtenant common areas and other uses incidental to the predominant uses. See Zoning Code for complete definition.

Plat: A map or maps of a subdivision.

Pre-Application Conference: An initial meeting between subdividers and municipal representatives which affords subdividers the opportunity to present their proposals informally. (See Section 12-4-2 of these Regulations, as applicable.)

Preliminary Approval: Approval of the Preliminary Plat by the Commission and Council, as evidenced in their meeting minutes and noted upon prints of the plat, constitutes authorization to proceed with engineering plans and Final Plat preparation.

Preliminary Plat: A tentative map or maps, including supporting data, indicating a proposed subdivision development, prepared in accordance with Section 12-4-3 of these Regulations, presented for preliminary approval.

Private Access Way: A common driveway providing immediate access from a public right-of-way or private street to a residence or small group of residences, or divided interests in air rights exempt from management, maintenance and liability responsibilities on the part of the Town.

Private Street: A street or way owned and maintained by an individual or group of individuals providing the right to controlled access to one (1) or more lots, parcels, or divided interests in air rights exempt from management, maintenance and liability responsibilities on the part of the Town. The Town reserves the right to install, permit, maintain or permit to be installed and maintained, utilities in the right-of-way, including surface use for refuse collection and public safety services.

Public Improvement Standards: A set of regulations or standards, adopted by the Town, setting forth the details, specifications, instructions and procedures to be followed in planning, design and construction of certain public improvements in the Town.

Public Open Space: An open space area conveyed or otherwise dedicated to a government agency or other public body for recreational, cultural or conservation uses. Public Open Space does not include right-of-ways.

Recorded Plat: A Final Plat bearing all of the certificates of approval required of Section 12-4-5 D of these Regulations, as applicable, and duly recorded in the Yavapai County Recorder's Office.

Regulations: The Town of Clarkdale Subdivision Regulations as contained herein.

Re-subdivision: The changing of design, subdivision name, lot lines, size of lots, or road alignment of any recorded or approved subdivision in the Town.

Retaining Wall: A wall or terraced combination of walls used solely to retain more than eighteen inches (18") of earth, but not to support or to provide footing for a structure.

Right-of-Way: (ROW) An area of land dedicated to the public and fee simple title conveyed to the Town for drainage, pedestrian, trail, bicycle, utility, street lighting, landscaping or roadway purposes.

Sanitary Engineer: A professional engineer registered in the State of Arizona to practice in the branch of sanitary engineering.

Sketch Plan: A preliminary presentation and attendant documentation of a proposed subdivision or site plan of sufficient accuracy to be used for the purpose of discussion and classification.

Statutory Dedication: The dedication of land for general or public use to the Town as required by these Subdivision Regulations as a condition for acceptance of a subdivision plat for filing.

Street: Any street, avenue, boulevard, road, lane, parkway, place, viaduct, or other way which is an existing state, county, or municipal roadway; or a street or way shown in a plat heretofore approved pursuant to law or approved by official action; or a street or way in a plat duly filed and recorded in the County Recorder's Office. A street includes the land between the right-of-way lines, whether improved or unimproved, and may comprise pavement, shoulders, curbs, gutters, sidewalks, drainage apparatuses, or other improvements.

Subdivider: A subdivider shall be deemed to be the individual, firm, corporation, partnership association, syndication, trust or other legal entity that files the application and initiates proceedings for the subdivision of land in accordance with the provisions of these Regulations and said subdivider need not be the owner of the land.

Subdivision: Improved or unimproved land or lands divided for the purpose of financing, sale or lease, whether immediate or future into four (4) or more lots, tracts or parcels of land, or, if a new street is involved, any such property which is divided into two (2) or more lots, tracts or parcels of land, or the division of land that already has boundaries fixed by a recorded plat, which is divided into two or more parts. Subdivision also includes any condominium, cooperative, community apartment, townhouse or similar project containing four (4) or more parcels, in which an undivided interest in the land is coupled with the right of exclusive occupancy of any unit located thereon.

"Subdivision" does not include the following:

A. The sale or exchange of parcels of land to or between adjoining property owners if the sale or exchange does not create additional lots.

B. The partitioning of land in accordance with other statutes regulating the partitioning of land held in common ownership.

C. The leasing of apartments, offices, stores or similar space within a building or trailer park, nor to mineral, oil or gas leases.

Subdivision Committee: A committee established to minor subdivisions applications, to

provide guidance to the subdivider, and to perform other duties as the Council and Commission may require (see Section 12-1-16).

Subdivision Design: Street alignment, grades and widths, alignment and widths of easements and right-of-way for drainage, sanitary sewers and public utilities, streets, roads, pedestrian ways, the arrangement and orientation of lots and locations of buildings, if required, together with refuse collection and maintenance easements in condominium developments.

Technical Review: The detailed review by the Town Engineer to approve all details of the engineering plans and specifications for public improvements before recommending that the subdivider proceeds with Final Plat procedures.

Through Lot: A lot abutting two (2) streets that do not intersect while adjoining the lot.

Town: The Town of Clarkdale, Arizona.

Utilities: Installations or facilities, underground or overhead, furnished for the use of the public; electricity, gas, steam, communications, water, drainage, sewage disposal, or flood control, owned and operated by any person, firm corporation, municipal department, or board, duly authorized by state or municipal regulations. Utility or utilities as used herein may also refer to such persons, firms, corporations, departments, or boards, as applicable herein.

Utility Easement, Public: An easement granted to a utility company or governmental agency to be used for the public placement of utilities.

Vicinity Map: A map, chart or diagram showing the geographical location of a proposed development in relationship to the surrounding region as indicated by various physical features.

Zoning: Restrictions on the use of land as regulated in the Town Zoning Code.

ARTICLE 12-3 SUBDIVISION DESIGN PRINCIPLES AND STANDARDS

Section 12-3-1 General

The provisions of this Section shall apply to all subdivisions which are located wholly or partially within the Town of Clarkdale. Every subdivision shall conform to the goals and objectives of the General Plan, the Zoning Code, the Town Code and the Arizona Revised Statutes and, to the greatest degree possible, the following goals:

- to insure adequate traffic circulation through coordinated street systems with relation to major thoroughfares, adjoining subdivisions, and public facilities;
- to promote development that incorporates multimodal transportation options;
- protect significant, as determined by the Town, natural areas and scenic assets;
- to achieve individual property lots of reasonable utility and livability;
- to secure adequate provisions for water supply, drainage, sanitary sewers, and other health requirements;
- to encourage projects that incorporate efficient uses of renewable energy sources, including but not limited to, solar, geothermal and wind;
- to ensure consideration for adequate sites for schools, recreation areas, and other public facilities;
- to promote the conveyance of land by accurate legal description; and to provide the logical procedures for the achievement of this purpose;
- to minimize detrimental impacts to the environment by encouraging site designs that protect and enhance the natural features and environmental quality of a site;
- to encourage landscaping that limits water and energy use and preserves existing natural vegetation;
- to encourage the preservation of existing wildlife habitat; and
- to encourage the substitution of effluent for potable water when possible.

All construction and repair of public facilities and private roads shall be accomplished in accordance with the standards adopted by the Town of Clarkdale. Additionally, all traffic control devices shall be placed in accordance with the latest edition of the Manual of Uniform Traffic Control Devices as adopted by the Arizona Department of Transportation.

Subdivision designs that promote the preservation of natural features, unique vegetation, historical sites and archeological sites are encouraged and may be required.

Section 12-3-2 Reservation of Land for Public Use

Where the tract of land to be subdivided contains all or any part of the site of a park, school,

flood control facility, or other public area as shown on the General Plan, or as recommended by the Commission, such site shall be dedicated to the public or reserved for acquisition by the public within one (1) year after recording the Final Plat unless a different timeline is agreed upon in the subdivision or development agreement. An agreement should be reached between the subdivider and the appropriate public agency regarding time, method and cost of such acquisition. If the public agency for whose benefit an area has been reserved does not exercise the reservation agreement set forth in this Section by agreeing to a timetable for development and dedication of the reserved land within such one (1) year period or such extended period as may be mutually agreed upon by such public agency and the subdivider, the reservation of such area shall terminate.

Section 12-3-3 Landscape Requirements

Subdivision Landscaping shall meet the requirements of **Chapter Nine-Landscape Design Standards of the Town of Clarkdale Zoning Code**. Specifically, landscaping for subdivisions should include the following elements:

A. Use of site design that retains and directs rainwater to landscape areas.

B. Retention, to the greatest extent practical, of existing natural trees and shrubs on the site.

C. Transplanting of existing native vegetation that cannot be retained into new landscape area.

D. Use of an effective irrigation system that senses soil moisture.

E. Design of irrigation system that avoids overspray and overflow.

F. A target shut-off date for the irrigation system.

Section 12-3-4 Street Location and Arrangement

A. Whenever a tract to be subdivided embraces any part of a street designated in the adopted Town General Plan, Street Plan, Trail Plan, or Circulation Plan, such streets, bicycle ways, pedestrian ways and trails shall be platted in conformance therewith.

B. Street layout shall provide for the continuation of such streets as the Subdivision Committee and/or the Commission may designate.

C. The street pattern in the land development shall not landlock adjacent

property nor prevent access to public land.

D. Whenever a tract to be subdivided is located within an area for which a Neighborhood Plan has been approved, the street arrangement shall conform substantially to said plan.

E. Proposed collector streets shall be extended to the tract boundary to provide future connection with adjoining unplatted lands, or existing collector streets.

F. Residential streets, other than designated collector streets, shall be so arranged as to discourage through traffic.

H. Where a subdivision abuts or contains the right-of-way of a drainage way, an irrigation ditch, a railroad right-of-way, or abuts a commercial or industrial land use, the Director and Commission may require the location of a street approximately parallel to and on each side of such right-of-way at a distance suitable for appropriate use of intervening land. Such distance shall be determined with due regard for approach grades, drainage, bridges or future grade separations.

I. Streets shall be so arranged in relation to existing topography as to produce desirable lots of maximum utility and streets of reasonable gradient, and to facilitate adequate drainage.

J. Alleys shall be required in all commercial and industrial subdivisions unless the Subdivision Committee and the Commission recommend waiving this requirement. Alleys may be required in residential subdivisions if the Subdivision Committee and the Commission recommend that alleys be required to complete an existing pattern or to provide secondary access to adjacent properties or service.

K. Half-streets shall be discouraged, except where necessary, to provide right-of-way required by the adopted Town Circulation Plan, to complete a street pattern already begun, or to ensure reasonable development of a number of adjoining parcels. Where there exists a platted half-street abutting the tract to be subdivided, the remaining half shall be platted within the tract.

L. Street patterns that provide multiple accesses to the subdivision are encouraged and may be required by the Committee, Commission and/or the Council.

Section 12-3-5 Dedicated Access

A. Each subdivision shall provide for adequate traffic circulation based on the Average Daily Traffic (ADT) and classification system in Section 12-3-6 of these Regulations.

B. Where private streets are approved, the plat, the deed restrictions and the Homeowners Association by-laws shall contain statements declaring these streets to be private and remaining the permanent responsibility of the Homeowners Association. Such private streets are subject to an easement authorizing use by emergency and public service vehicles.

C. Cul-de-sac streets shall not be any longer than six hundred feet (600'). The Director and the Commission may recommend approval of a longer cul-de-sac if the topography, adjacent platting or other unusual conditions justify the exception.

D. Cul-de-sac streets shall terminate in a circular right-of-way, fifty feet (50') in radius, with an improved traffic turning circle of a minimum forty feet (40') in radius.

E. Acute angle intersections and intersections on the inside of a horizontal curve are prohibited, unless otherwise approved by the Town Engineer.

F. Street designs shall meet the criteria of Chapter 12, Figure 2 (Street Classification and Minimum Design Standards) and Figure 3 (Street Curve and Design Data).

G. Dead-end streets will not be approved except in locations designated by the Subdivision Committee and Commission as necessary to future extension in development of adjacent lands. In any case, a dead-end street serving more than four (4) lots shall provide, by easement, a temporary turning circle with a forty foot (40') radius or other acceptable design to accomplish adequate access.

H. At street intersections, property line corner shall be rounded by circular arc, said arc to be the corner cut-off minimum from figure 4.

I. At the intersection of two (2) streets of different classification, the corner cut-off dimension and curb return radius of the wider street shall be used.

J. Vertical curbs shall be required on the downhill side of streets having

grades of six percent (6%) or greater.

K. The minimum street grade shall be five percent (0.5%).

L. No subdivision shall be approved without dedicated legal access to a collector street.

Section 12-3-6 Street Classification

A. Streets will be classified in a street hierarchy system with design tailored to function as shown in Chapter 12, Figure 2.

B. The street hierarchy system shall be defined by use and Average Daily Traffic (ADT) rates calculated by average trip generation rates prepared by the Institute of Transportation Engineers, as indicated in Chapter 12, Figure 1. The subdivider may use another approved method if it can be demonstrated to better reflect local conditions.

C. The subdivider will demonstrate to the Commission that no street shall exceed the maximum ADT's of Figure 2.

D. Rural street designs may be used only in residential areas developed with a minimum lot size of twenty thousand (20,000) square feet.

E. See Exhibits A-G for street design standards

Section 12-3-7 Block Design

A. Maximum length of blocks measured along the centerline of the street, and between intersecting street center lines, is twelve hundred feet (1200'), except that in a development with lot areas averaging one-half (½) acre or more, or where conditions warrant, this maximum may be exceeded by five hundred feet (500'). Blocks shall be as long as reasonably possible under the circumstances within the above maximums in order to achieve depth and possible street economy and to reduce the expense and safety hazard arising from excessive street intersections.

B. Pedestrian/bicycle ways with right-of-way widths of eight to twelve feet (8'-12') may be required where essential for circulation or access to schools, playgrounds, shopping centers, public land, transportation and other community facilities. Pedestrian/bicycle ways may also be used for utility and drainage purposes if so noted on the plat and approved by the Commission and the Town Engineer.

Section 12-3-8 Lot Planning

A. Lot width, depth, frontage, area, lot coverage, floor area ratio and building setbacks shall comply with the minimum requirements of the Zoning Code, and shall be appropriate for the location and character of the development proposed, and for the type and extent of street and utility improvements being installed. Where steep topography, unusual soil conditions, or drainage problems exist or prevail, special lot width, depth and area standards may be considered. Innovative development approaches such as clustered or planned development may be explored in the interest of producing unique, environmentally sensitive projects.

B. Lands that are subject to periodic inundation, subsidence of the earth's surface, high water table, adverse topography, adverse soils, or other natural or manmade hazards to life or property shall be excluded from subdivision unless it can be substantiated by the subdivider that proposed lot configurations and sizes, grading and drainage techniques, or other special development approaches are provided as deemed reasonable and necessary to protect the public health, safety, or general welfare on any lands to be subdivided affected by such characteristics.

C. The Council may approve subdivision of such land upon receipt of written evidence from the Town Engineer, the County Flood Control District and State and County Health Authorities that the construction of specific improvements can be expected to render the land suitable; thereafter, construction upon such land shall be prohibited until specified improvements have been planned and the construction guaranteed.

D. Side lot lines shall be substantially at right angles or radial to street lines, except where adverse terrain makes such design impractical.

E. All lots shall have frontage as required by the appropriate zoning district on a fully dedicated public or private street.

F. Single family lots on curvilinear streets shall have rear lot lines consisting of a series of straight lines with points of deflection occurring only at the junction of side or rear lot lines unless otherwise approved.

G. Corner lots may be required to be wider than interior lots to provide for setback requirements.

H. Single family residential lots extending through the block and having frontage on two (2) parallel local streets is prohibited.

I. Residential lots shall not be accessible from collector or arterial streets.

J. Lots with good solar orientation are encouraged.

Section 12-3-9 Street Naming

New street names shall not duplicate or be similar to those already in existence in, or within three (3) miles of the Town. Where streets are continuations of existing streets, the name of the existing street shall be used. Proposed street names will be reviewed by the Director and must be approved by the Commission and Yavapai County Addressing Division.

Section 12-3-10 Easement Planning

A. Easements for utilities shall be provided as necessary to assure the provision of services to each lot.

1. The developer will provide to the Director written documentation of approval by the utilities with respect to easements.

B. Drainage easements shall be provided to the satisfaction of the Town Engineer and the County Flood Control District. In no case shall drainage easements be less than twenty feet (20') in width. Such easements shall not necessarily prohibit construction over drainage ways as long as required flows are maintained.

C. Easements necessary to assure non-motorized access to adjacent public lands may be required to the satisfaction of the Commission. Such easement shall not exceed ten feet (10') in width and shall be located so as to not preclude reasonable development.

D. Where alleys are provided, a sufficiently sized refuse container easement may be required as determined by the Director.

E. Increased right-of-way widths and slope easements may be required by the Town Engineer if drainage calculations show the need.

Section 12-3-11 Condominium Development-Air Rights Planning

A. The processing of subdivision plats for condominium developments shall follow procedures set forth in these Regulations for the processing of land subdivision plats.

B. In addition to the requirements of the above, all plats for condominium subdivisions shall include:

1. All building locations.
2. All private access ways, driveways and parking areas.
3. Designation of all commonly-owned property, including that within buildings.

C. Final Plats for condominiums shall be recorded prior to the issuance of a building permit.

D. Preliminary Plats for the conversion of conventional apartments to condominiums shall show:

1. Firewall construction, if required by the Director or the Commission.

2. Additional parking, if required by the Director or the Commission.

3. Additional open space, if required by the Director or the Commission.

4. Location of individual utilities lines and meters, if needed.

ARTICLE 12-4 SUBDIVISION PLATTING PROCEDURES AND REQUIREMENTS

Section 12-4-1 Outline of Subdivision Procedures

The preparation, submittal, review and approval of all subdivision plats located in the Town limits shall proceed through the following progressive stages:

A. Stage I Pre-Application Conference

B. Stage II Preliminary Plat

C. Stage III Technical Review

D. Stage IV Final Plat, Recording and Post Approval

The process for completing these stages varies depending on the type of subdivision, determined by the number of new parcels being created.

Type	Subdivision 10 lots or more	Minor Subdivision 4 – 10 lots	Minor Land Division 2-3 lots
Stage I Preapplication Conference	Required Section 12-4-2	Required Section 12-5-2	Required Section 12-6-5
Stage II Preliminary Plat	Required- Public Hearing by Planning Commission and Town Council Section 12-4-3	Required- Reviewed by Subdivision Committee, Approved by Town Council Section 12-5-3	Survey from a State of Arizona registered land surveyor. Section 12-6-4
Stage III Technical Review	Required Section 12-4-4	Required Section 12-5-4	Not required
Stage IV Final Plat, Recording and Post Approval	Required Section 12-4-5	Required Section 12-4-5	Required within 60 days of approval. Section 12-6-5-E

Section 12-4-2 Stage I - Pre-Application Conference

A. The "Pre-Application Conference" stage of subdivision planning comprises an investigatory period which precedes actual preparation of preliminary plans by the subdivider. During this stage the subdivider makes intentions know to the Town and is advised of specific public objectives related to the subject tract and other details regarding platting procedures and requirements.

B. Actions by the subdivider: The subdivider shall meet informally with the Community Development Department to present a general outline of the proposal, including but not limited to:

1. Two (2) paper copies and one electronic copy of the sketch plans that includes: the name of the development, location by Section, Township and Range with reference to section corners and quarter corners, land use, street and lot arrangement, tentative lot sizes, existing improvements, major washes and drainage ways, known flood hazards, generalized land use in the vicinity, documented historical or archeological resources, and proposed bikeways, trails, open space, parks, and recreation facilities.

2. Tentative proposals regarding water supply, sewage disposal, surface drainage and street improvements.

3. Information regarding legal problems which are associated with the property, if any.

C. Actions by Community Development Department (CDD): The CDD will discuss the proposal with the subdivider and advise him/her of procedural steps, design and improvement standards, and general plat requirements. Then depending on the scope of the proposed development, the CDD will proceed with the following investigations:

1. Check existing zoning of the tract and make recommendations if a zoning change is necessary or desirable.

2. Determine the adequacy of existing or proposed schools, parks and other public places.

3. Inspect the site or otherwise determine the relationship to major streets, utility systems, and adjacent land uses and to determine any unusual problems such as topography, utilities, flooding, etc.

D. Upon the conclusion of Stage I activities, the subdivider shall prepare a Memorandum of Understanding. It shall be formally acknowledged in writing by all parties. The Memorandum of Understanding shall include all items discussed.

Section 12-4-3 Stage II - Preliminary Plat

The Preliminary Plat stage of a subdivision includes detailed subdivision planning, submittal, review and approval of the Preliminary Plat. To avoid delay in processing this application, the subdivider shall provide the Town with all information essential to determine the character and general acceptability of the proposed development.

Any furtherance of pre-development activity engaged in, by, or on behalf of the developer while an application for zoning amendment or variance is pending, shall in no instance be construed as having been undertaken in reliance of a favorable determination of such application, notwithstanding the nature of the recommendation on the matter of the Director of Community Development.

A. ZONING:

The subdivision shall be designed to meet the specific requirements of the zoning district within which it is located. However, in the event that rezoning is deemed necessary, such as in the case of a Planned Area Development (PAD), the rezoning shall be initiated by the property owner or an authorized agent, and be heard and considered by the Commission and Council (see the Town of Clarkdale Zoning Code, Chapter 13, Section 13-2, for procedures regarding zoning changes). Any change in zoning or site plan approval required in relation to approval of the Preliminary Plat shall have been approved by the Council before the recommendation of approval of the Preliminary Plat by the Commission.

B. SANITARY SEWAGE, REFUSE DISPOSAL AND WATER SUPPLY:

As a prerequisite to Preliminary Plat review, the subdivider shall have informed all pertinent regulatory agencies of the tentative plans and the subdivider shall become informed of the general requirements for sewage disposal, water supply and refuse disposal which may apply to the property.

C. OWNER'S AUTHORIZATION:

If the applicant is not the legal owner of the property to be subdivided, said applicant shall, before filing the plat, obtain and submit notarized written consent to act in behalf of the legal owner(s) as the subdivider.

D. **PRELIMINARY PLAT SUBMISSION:**

1. Two (2) twenty-four inch by thirty-six inch (24" x 36") copies of the Preliminary Plat and required supporting data, prepared in accordance with requirements set forth in Section 12-4-4-E of these Regulations, and one (1) digital copy of all materials shall be filed with the Director of Community Development at least sixty (60) days prior to the Commission meeting at which the subdivider desires to be reviewed. Copies of the Preliminary Plat shall be reproduced in the form of blue line or black line prints on a white background. Scheduling of the case for Commission review shall be dependent upon adequacy of data presented and completion of processing, and shall occur within sixty (60) days of date of submission.

2. Fee: A Preliminary Plat fee, as adopted by the Council, shall be paid by the applicant prior to the acceptance of the Preliminary Plat. The filing fee shall also cover filing of an amended or revised Preliminary Plat handled as the same case. If preliminary approval expires prior to application for final approval, the plat shall be resubmitted for preliminary approval as a new case and the subdivider shall pay the required fees.

3. The submittal shall be checked by the Director of Community Development for content in accordance with requirements set forth in Section 12-4-4-E of these Regulations. If incomplete, the subdivider will be notified within one week of receipt and given the opportunity to comply. Upon determination the application is complete, a case number will be assigned and the applicant will be notified in writing of the acceptance, and place the case on the Planning Commission agenda for review and public hearing no sooner than fifteen (15) days or no later than forty-six (46) days after acceptance of the Preliminary Plat application. Notice of a public hearing shall be given not less than fifteen (15) days nor more than thirty (30) days prior to the date of the hearing as specified in section Section 12-4-3-D-4i, posting the subject property, and mailing notification to all persons whose names appear on the latest adopted county tax roll as owning property

within three hundred feet (300') of the exterior boundaries of the subdivision that is the subject of the hearing.

4. Notice of the required public hearing shall be published in a newspaper of general circulation, in a "display ad" covering not less than one-eighth (1/8) of a page, and include a minimum of a four inch by four inch (4"x 4") copy of the Preliminary Plat and the statement "a copy of the staff recommendations regarding this proposed subdivision will be available on (date) for the public's review".

E. FORM OF PRESENTATION FOR PRELIMINARY PLAT:

The information hereafter required as part of the Preliminary Plat submittal shall be shown graphically, or by note on plans, or by letter, and may comprise several sheets showing various elements of required data. All mapped data for the same plat shall be drawn at the same standard engineering scale. The scale shall not be smaller than one inch equals one hundred feet (1" = 100').

All Preliminary Plat submittals shall include the following:

1. Letter of intent from the developer describing the subdivision and proposed name of subdivision and its location by Section, Township and Range, reference by dimension and bearing to an acceptable government section or quarter-section corner. The proposed subdivision name shall not duplicate any other recorded plat in Clarkdale or adjacent communities.

2 Name, address, email address and telephone number of the owner of record of the property, and of the applicant, if not the owner of record.

3. A copy of the title paperwork for the property.

4. Name, title, address, email address and telephone number of engineering, land planning, surveying, architectural firm, or individual preparing the plat.

5. Name, book and page number of any recorded subdivision adjacent to or having common boundaries with this plat.

6. Scale (written and bar graph), north point and date of preparation

including dates of any subsequent revision.

7. Total subdivision acreage and dimensions. Do not include previously dedicated rights-of-way in this figure.

8. Fully dimensioned boundary lines.

9. A vicinity map which shows the relationship of the proposed subdivision to dedicated right-of-ways and any other facilities and developments which locate the subdivision. This map may be on the Preliminary Plat, but, if it is not practical, then a separate map showing title, scale, north point and date shall be provided.

10. Names, locations and widths of adjacent streets, highways, ways, railroads and utility easements including streets and rights-of-way providing legal dedicated right-of-way access to the property.

11. Location, names, areas, width, proposed grade curve, super elevations, sight distances, and radii for all streets, highways and ways in the proposed subdivision and off-site, if required, to provide adequate access to the subdivision. Include connections to adjoining platted tracts, public lands and streets contained therein.

12. The width and approximate locations of all existing or proposed public or private easements or rights-of-way for streets, ways, trails, drainage, sewers, public utilities, flood control purposes, access to adjacent public land, or other community facilities.

13. Typical lot dimensions (scaled); dimensions of all corner lots, all lots of more than four (4) sides and lots of curvilinear sections of streets; each lot numbered individually and consecutively; total number of lots or dwelling units.

14. Designations of all land to be dedicated or reserved for public use with use indicated, including land reserved for parks, recreational facilities, school sites, and fires stations pursuant to A.R.S. 9.463.01.0.

15 Area of all lots and parcels not for single family residential use, in acres. The area of all single-family residential lots in square feet if under or equal to one (1) acre in size, or in acres, if the lots are over one (1) acre in size.

16. A report by a sanitary engineer describing proposed wastewater disposal.

17. Locations, elevations, and sizes of culverts, storm drains and detention facilities. This information shall be accompanied by a hydrologic and hydraulic analysis, which meets the criteria set forth in the most recent Yavapai County Flood Control District Storm Water Detention Material and Drainage Criteria Manual.

18. The locations of floodway and floodplain boundaries and base flood elevations as determined on Federal Emergency Management Agency (FEMA) Flood Maps and the location of other water courses and land subject to inundation or flood hazard.

19. Engineer's calculations and estimated values for each tributary of storm runoff for a twenty-five (25) year and one hundred (100) year frequency storms as specified in the Yavapai County Flood Control District Ordinance. The values shall be indicated along the boundary of the plat for all points of drainage entering and leaving the property.

20. Proposed cut and fill areas showing original and proposed grade levels with elevations and contours.

21. Proposed use of all lots, tracts or parcels within the subdivision.

22. Location and dimensions of all existing or proposed structures, walls, fences, irrigation ditches, water wells, pipelines, utilities, and other physical features. Plat shall indicate which improvements are to remain, be altered or removed.

23. Letters of serviceability for all utilities proposed to service the subdivision.

24. Contour intervals shall be such as to adequately reflect the character and drainage of the land.

25. School or park sites that may be required.

26. The zoning of all adjacent land.

27. Any deed restrictions or covenants and property owners association agreements to be or presently imposed upon the plat or

any part thereof.

28. A Phase II County Flood Control Report.

F. **PRELIMINARY PLAT REVIEW:**

1. The Director of Community Development shall distribute copies of the plat to the following:

   a. All Planning Commissioners.

   b. The Town Manager, Town Engineer, Police Chief, Director of Public Works and/or Utilities Departments, Fire District Chief and Building Official for the overall review and recommendations.

   c. The Yavapai County Flood Control District for review of flood control and drainage measures.

   d. The Yavapai County Environmental Services Department for review of sewage disposal proposal.

   e. Representatives of local utilities for review.

   f. Where the land abuts a State Highway, to the Arizona Department of Transportation for recommendations regarding right-of-way and intersection design.

2. The reviewers may transmit their recommendations to the Director in writing or verbally. The Director of Community Development will then summarize the recommendations, prepare a report and present it to the Commission.

G. **RESPONSIBILITIES OF THE COMMISSION:**

The Commission shall recommend for approval, conditional approval or denial of the Preliminary Plat as proposed after considering the recommendations and findings of the Director of Community Development and all other appropriate agencies, and testimony of the applicant, interested individuals and the public present during at least one (1) public meeting.

1. Recommendation for approval by the Commission shall be based

on the following findings:

a. The proposed subdivision conforms to the adopted General Plan goals, objectives and policies of the Town.

b. The proposed subdivision, as reviewed and approved, will not be detrimental to the public health, safety, and general welfare.

c. Environmental concerns conform with adopted standards.

d. The design of the proposed subdivision is sensitive to the physical characteristics of the site.

e. The proposed subdivision is consistent with provisions and intents of Zoning Code requirements applicable to the property.

f. The proposed subdivision conforms to the improvement standards and design standards set forth in these Regulations and other applicable Town, County, State and Federal regulations.

2. After recommending approval, the Commission will notify the Town Clerk to schedule a public hearing on the matter before the Council, no sooner than twenty-one (21) days nor later than forty-six (46) days after the date of the Commission's action.

3. If the Preliminary Plat is generally acceptable but requires minor revision(s), the Commission shall recommend for conditional approval with the required revisions being noted in the meeting minutes. The Commission will forward a copy of the minutes with the copies of the Preliminary Plat to the Council.

4. If the Commission finds that the Preliminary Plat requires major revision, the case shall be held over pending revision, re-submittal, processing and rescheduling for review.

H. **APPEALS**:

If the Commission finds that the Preliminary Plat does not meet the requirements of these Subdivision Regulations, the subdivider may appeal this decision to the Council.

1. All appeals shall be made in writing and filed with the Council with a copy also filed with the Commission, setting forth the particulars and the reasons for the appeal.

2. Appeals must be made within thirty (30) days from the date of the findings of the Commission.

3. The Council will hear such cases for appeal no later than thirty (30) days after appeal is taken.

4. The Council shall decide appeals wherein it is alleged by the subdivider that there is error in any order, requirement, decision, grant or refusal made by the Commission or any official in the administration of these Regulations.

5. The Council shall approve, disapprove or approve with modifications, upon appeal or recommendation of the Commission in specific cases, such variations as will not be contrary to the public interest, where according to special conditions a literal enforcement of these Regulations will result in unnecessary hardship, so that the spirit of these Regulations shall be observed and substantial justice done.

I. PUBLIC HEARING BEFORE THE COUNCIL AND NOTICE:

The Council shall hold at least one (1) public hearing on each Preliminary Plat. Said hearing shall commence within forty-six (46) days of the date that the Commission made a recommendation to the Council on the Preliminary Plat. Notice of a public hearing shall be given not less than fifteen (15) days nor more than thirty (30) days prior to the date of the hearing, by publication in a newspaper of general circulation, posting the subject property, and mailing notification to all persons whose names appear on the latest adopted county tax roll as owning property within three hundred feet (300') of the exterior boundaries of the subdivision that is the subject of the hearing.

J. RESPONSIBILITIES OF THE COUNCIL:

The Council shall approve, conditionally approve or deny the Preliminary Plat as proposed after considering the recommendations and findings of the Commission, the Director of Community Development and all other appropriate agencies, and testimony of the applicant, interested individuals

and the public. Council action shall be based on its findings of fact and conclusion. The application, the Commission's recommendation, the subdivider's presentation, staff reports, public testimony and other information provided at the Council's public hearing may all be part of the Council's findings of fact and conclusion. If the Council is unable to make a determination because additional consideration is necessary, the Council may continue the Preliminary Plat application to its next regularly scheduled public meeting or such other properly noticed public meeting as agreed between the Council and the applicant. At the discretion of the Council, the plat may be given preliminary approval by the Director of Community Development when the Preliminary Plat has been satisfactorily revised in accordance with the stated conditions and reviewed by the Director of Community Development. If the Council requires major changes including, but not limited to changes in street layout, lot size, access to the subdivision, easements or public improvements, then the Preliminary Plat will be returned to the Commission for recommendation at their next regularly scheduled meeting, prior to approval by the Council.

K. COUNCIL REJECTION:

If the Preliminary Plat is rejected, the new filing of a plat for the same tract, or any part thereof, shall follow the aforementioned procedure and be subject to the required fee.

L. SIGNIFICANCE OF PRELIMINARY PLAT APPROVAL:

Preliminary approval constitutes authorization for the subdivider to proceed with preparation of the engineering plans and specifications for public improvements. Preliminary approval is based upon the following terms:

1. The basic considerations under which approval of the Preliminary Plat is granted will not be changed prior to the expiration date of Preliminary Plat approval.

2. Approval is valid for a period of twelve (12) months from the date of Council action. Requests can be made for one (1) year extensions up to a total of not more than three (3) years from the original date of approval. Extensions of the Preliminary Plat approval may be granted by the Council upon receipt of a letter from the subdivider before the expiration date.

3. Preliminary Plat approval, in itself does not assure final acceptance of streets for dedication or continuation of existing zoning requirements for the tract or its environs. It does not constitute authorization to record the plat.

Section 12-4-4 Stage III - Subdivision Technical Review

The "Technical Review" stage is designed for the Town Engineer to approve all details of the engineering plans and specifications for public improvements before recommending the subdivider proceed with Final Plat procedures.

A. Submittal for Technical Review shall be made to the Town Engineer with one copy to the Director of Community Development. The submittal shall be checked by the Town Engineer for content in accordance with requirements set forth in Section 12-4-5-B of these Regulations and for substantial conformity with the approved Preliminary Plat. Whether complete, incomplete or non-conforming with the approved Preliminary Plat the subdivider will be notified within fifteen (15) days of receipt of submittal and given the opportunity to comply.

B. Submittal requirements: The following information is required for Technical Review submittal and shall be shown graphically, by note, or by letter, and may consist of several sheets showing various elements of the required data. All mapped data for the same plat shall be drawn at the same standard engineering scale, adjusted to produce an overall drawing of twenty-four inch by thirty-six inch (24" x 36").The applicant may use more than one (1) sheet if necessary, using one (1) of the standard engineering scales. The scale shall be not less than one inch equals one hundred feet (1" = 100') providing sufficient detail to illustrate the subdivider's intent.

1. Two (2) sets of the approved Preliminary Plat. Planned Area Developments (PADs) shall submit two (2) copies of typical floor plans and elevations. A digital copy of all submitted materials is required.

2. Identification and descriptive data:

   a. All information required of the Preliminary Plat.

   b. Building setbacks for a typical lot. Where there are lots with more than four (4) sides or whose shape may be considered atypical, show all setbacks.

c. Construction plans of all improvements required by these Regulations, on-site and off-site, including but not limited to sewers, all utilities, roads, parks, sidewalks, drains, culverts, and grading. A Phase III County Flood Control Report.

3. Review Fee: At the time of filing of the plat for Technical Review, the subdivider shall pay a fee as fixed by the Council. If revisions are made and further review is required, additional fees may be required.

C. The Town Engineer will review the technical details of the plat and note any changes necessary for the plat to be in compliance with all Town, County, State and Federal Engineering Standards. The Town Engineer will approve, sign and stamp the plat, or reject the plat, and notify the Director of Community Development in writing of findings. The Director of Community Development will notify the subdivider of the findings in writing. If the plat is approved, the Director will advise the subdivider to proceed with final platting procedures. If the plat was rejected, the Director or Town Engineer will review with the subdivider the changes needed to receive approval.

Section 12-4-5 Stage IV - Final Plat, Recording and Post Approval

This stage includes the approval of the final design of the subdivision, and the approval of the public improvement plans, including the submittal of the Final Plat for review and action by the Council. Also, this stage includes assurances that shall be required and approved by the Council before recording of the plat and the terms for the release of assurances and acceptance of improvements.

A. **Filing of Final Plat:**

1. To initiate Final Plat procedures, the subdivider shall file two (2) copies, and one (1) digital copy of the Final Plat, and an application with the Director. A digital copy of all submitted materials is required.

2. Filing Fee: At the time of filing for Final Plat approval, the subdivider shall pay a fee as fixed by the Council. If revisions are made and further review is required, additional fees may be required.

3. The Final Plat shall be presented in accordance with the

requirements set forth below and shall conform to the approved Preliminary Plat or the Revised Preliminary Plat and the approved Technical Review.

B. **Form of Presentation for the Final Plat:**

The following information is required as part of the Final Plat submittal. All mapped data for the same plat shall be drawn at the same standard engineering scale of at least one inch equals 100 feet (1" = 100'). A copy of the Final Plat and all supporting documents is also required in a digital format.

1. The Final Plat shall be legibly drawn, printed or reproduced by a process guaranteeing a permanent record in black ink on polyester film ("mylar"), that when filed, results in legible prints and negatives produced from the original.

2. Sheet size shall be twenty-four inch by thirty-six inch (24" x 36") with a border line drawn completely around each sheet leaving an entirely blank margin of one half inch (1/2") except that the binding edge shall be two inches (2").

3. Certificates, affidavits, and acknowledgments shall be legibly stamped or printed upon the plat with black opaque ink. All signatures shall be in black water proof ink, with the ink surface coated with a suitable substance when used on polyester film to assure permanent legibility. Names and titles of signers shall be lettered legibly under their signatures.

4. Scale shall be shown with a bar scale and a written scale.

5. The exterior boundary of the subdivision shall be indicated by a heavy line.

6. Each sheet shall be numbered, the relation of one (1) sheet to another clearly shown, and the total number of sheets shown on each sheet.

7. The case number, subdivision name, date, scale and north point shall be shown on each sheet.

8. Every Final Plat shall have a title sheet either as a separate page or where the size of the subdivision permits as part of the Final Plat.

Said title shall contain the following:

a. The subdivision name shall comprise the title.

b. Below the title shall be a sub-title consisting of a general description of all the property being subdivided, by reference to subdivisions or to sectional surveys.

c. References to adjacent subdivisions shall be worded identically with original records, with references to the books and pages of the subdivision.

d. Name, address, and registration number of seal of the registered civil engineer and/or registered land surveyor preparing the plat.

e. Affidavits, certificates, acknowledgments, endorsements, acceptances of dedication and notary seals required by law and by these Regulations shall appear on the title sheet.

f. The title sheet shall show the basis of bearings.

g. A vicinity map showing the proposed subdivision and the surrounding subdivisions, dedicated right-of-way access to the subdivision, and parcels and streets located within a three hundred foot (300') radius of the boundaries of the proposed subdivision.

9. The following survey data shall be required as a part of Final Plat submittal:

a. The corners of the subdivision shall be located on the monument lines of abutting streets; boundaries of the tract to be subdivided shall be fully balanced and closed, showing all bearings and distances, determined by an accurate survey in the field. All distances shall be shown in feet and one hundredths of feet.

b. Any excluded parcels within or surrounded by the plat boundaries shall be noted as "not a part of this subdivision" and shall show all bearings and distances of the expected parcel as determined by an accurate survey in the field. All dimensions shall be expressed in feet and decimals.

c. Location and description of cardinal points to which all dimensions, angles, bearings and similar data on the plat shall be referenced. Each of two (2) separate corners of the subdivision transverse shall be tied by course and distances to separate section corners or quarter-section corners.

d. Location of all physical encroachments upon the boundaries of the tract.

e. Ties to any Federal, State, County and Town boundary lines, section corners and quarter corners involved.

f. Name, right-of-way lines, courses, lengths, and widths of all public streets, alleys, pedestrian or bicycle ways and utility easements; radii, points of tangency, curve lengths, and central angles of all curvilinear streets, alleys and intersection corners.

g. All drainage ways shall be shown on the plat. The rights-of-way of all major drainage ways shall be dedicated drainage ways or right-of-way as determined by the Town Engineer or County Flood Control District.

h. All easements for right-of-way provided for public services or utilities and any limitations of the easements. The following notations shall be placed on all Final Plats: "Construction within easements, except by public agencies and utility companies, shall be limited to utilities, and wood, wire, or removable section type fencing."

i. Location, dimensions, bearings, radii, arcs, and central angles of all sites to be dedicated to the Town with the use clearly indicated.

j. The limits of any one hundred (100) year flood plain identified using the standards set forth by the Director of the Arizona Department of Water Resources, together with the base flood elevation, shall be illustrated on the Final Plat. The regulatory elevation for the most critical location within each lot shall be shown on each lot that is impacted by the flood plain. A note shall also be placed on the plat indicating that "Flood Plain limits, base flood elevations

and regulatory elevations may be revised by subsequent studies approved by the Yavapai County Flood Control District."

10. The following description data shall be required as a part of Final Plat submittal:

a. All residential lots shall be numbered by consecutive numbers throughout the plat.

b. Dimensions and square footage of all lots.

c. "Tracts", "parcels", "exceptions" and "common open space" shall be so designated, lettered, or named, and clearly dimensioned.

d. Location of all adjoining subdivisions and developments with date, name, book and page number of recordation noted. If adjoining land is unrecorded or undivided, so shall it be marked on the plat.

e. Any existing or proposed private deed restrictions to be imposed upon the plat or any part or parts thereof pertaining to the intended use of the land, and to be recognized by the Town, shall be noted on the plat.

f. Limitations on rights of access to and from streets, lots and other parcels of land.

g. Locations and names of streets and pedestrian or bicycle ways adjacent to the proposed subdivision.

h. Typical section of proposed roadways to indicate thickness and type of surfacing, thickness of base courses as determined by soil analysis; design shall be by a Soils Engineer.

i. Detailed construction plans of all improvements on-site and off-site, prepared in accordance with all State, County and Town standards in effect at the time.

j. Locations and types of all traffic control devices in accordance with the latest manual of uniform traffic control

devices by Arizona Department of Transportation (ADOT).

k. Provisions for the perpetual maintenance of private roads, recreation facilities, and/or open spaces that are part of the subdivision shall be provided for in the Property Owners Association (or other legal entities) organizational Sections of Incorporation, and must be acceptable to the Town.

a. Letters from each utility company indicating serviceability of the subdivision.

11. The following dedication and acknowledgment information is required for Final Plat submittal:

a. Dedication: There shall be required as part of the Final Plat submittal an irrevocable offer of dedication of any streets, crosswalks, drainage ways, pedestrian or bicycle ways, trails, and other easements for public use by the parties holding title of record, by parties holding titles as vendees under land contract, by spouse of said parties, lienholders and all other parties having an interest in the property. If lands dedicated are mortgaged, the mortgagee shall also sign the plat. It may also be necessary to dedicate drainage easements to the Yavapai County Flood Control district. Dedication shall include a written location by Section, Township and Range of the tract. If the plat contains private access ways, the right to install and maintain utilities, including refuse collection, in these access ways, shall be reserved.

b. Acknowledgment of Dedication: Acknowledgment of the offer of dedication shall be certified by a notary public. All parties having any record title or interest in the land being subdivided shall be included in such acknowledgments.

c. An offer of dedication to the Town or County Flood Control District for any streets, pedestrian or bicycle ways, trails, areas, drainage ways, easements and other rights-of-way for public use either immediate or in the future shall not constitute public ownership or responsibility, until the Council formally accepts said offer of a dedication by separate instrument.

12. The following certifications shall be required as a part of the Final Plat submittal:

    a. Certification by the civil engineer or land surveyor preparing the plat, that the plat is correct and accurate and that the monuments described in it have either been set or located as described. All maps shall contain the seal of a civil engineer or land surveyor, whichever is applicable. Closure calculations may be required if deemed necessary by the Town Engineer.

    b. Certification of plat approval by the Yavapai County Health Department.

    c. A certificate signed and acknowledged by all parties having any record of title or interest in the land being subdivided offering for dedication rights of access to and from prescribed streets, lots and parcels of land.

    d. A statement of adequate water supply from the Arizona Department of Water Resources, or, if served by a water company, a statement of water serviceability from the serving water company (private or public).

13. A cost estimate for constructing the required public or private improvements signed and sealed by a professional engineer who is registered to practice in the State of Arizona. The cost estimate and method/type of assurance shall be approved by the Town Engineer and/or Town Attorney prior to approval of the Final Plat.

C. Final Plat Review:

1. The Director, upon receipt of the Final Plat submittal, shall immediately record receipt and date of filing, and check it for completeness. If complete, the Director shall review the plat for substantial conformity to the approved Preliminary Plat, or revised Preliminary Plat, and forward copies of the submittal to the following reviewing parties who shall make known their recommendations in writing: the Yavapai County Flood Control District, Yavapai County Health Department, the Arizona Department of Transportation, if plat abuts a State Highway, the Clarkdale Fire District and the Town of Clarkdale Public Works/Utilities Department.

2. The Director shall assemble the recommendations of the various reviewers, prepare a concise summary of their recommendations and submit, together with the reviewer's recommendations, to the Council. If the Director finds that the Final Plat does not conform to the Preliminary Plat, as approved by the Commission or the approved Technical Review, as approved by the Town Engineer, the Final Plat shall be submitted to the Commission for review and recommendation prior to submittal to the Council.

D. **Final Plat Approval, Recording and Post Approval:**

1. Upon receipt of a request for Council action from the Director, the Town Clerk shall place the case on the agenda of the next regular Council meeting, whereupon the Council shall approve or deny the plat.

2. When the certificate of approval by the Council has been transcribed on the plat, the Town Clerk shall retain the plat until the following is met:

   a. The Town Engineer certifies that the subdivision has been staked and that the engineering plans, for the subdivision improvements, have been approved.

   b. The required letters of assurance of improvements from each serving utility company are attached.

   c. An agreement executed by the Subdivider, in a form acceptable to the Town and approved the Town Council, covering the following:

      1. The subdivision improvements in a recorded development unit may be constructed in practical increments of lots, as specified by the subdivider, subject to provisions for satisfactory drainage, traffic movements, and other services as determined by the Town Engineer.

      2. The improvements, except those utility facilities specified in this Chapter, shall be constructed in accordance with plans approved by the Town Engineer and the appropriate Town department for

water and public sanitary sewer facilities, and by the Town Engineer for all other improvements. If the location of the development so requires, water and sanitary sewer facilities shall also be constructed in accordance with plans approved by the appropriate State and County departments.

3. The improvements, except those utility facilities specified in this Chapter, shall be completed within a specified time period, for each increment, as determined by the Town. An extension of time may be granted under conditions specified therein.

4. The subdivider shall give adequate assurance of the construction of each increment in accordance with this Chapter.

5. Progress payments may be made to the subdivider on order from any cash deposit made. Such progress payments shall be made in accordance with standards established by the Town Engineer.

6. Any work abandoned or not completed by the subdivider may be completed by the Town, and the Town shall be entitled to recover the construction costs from the subdivider's financial assurances posted with the Town, and if insufficient, from the subdivider.

7. Construction of all improvements within streets and easements, except those utility facilities specified in this Chapter, shall be subject to inspection by the Town Engineer.

8. No lots shall be released from the approved increment of lots until either the agreement or an assurance of construction has been posted and accepted by the Town Engineer.

9. With regard to on-site and off-site street and utility improvements accepted for maintenance by the Town of Clarkdale, the subdivider shall warrant all workmanship and materials involved in such

improvements for a period of one (1) calendar year after the date of written acceptance.

10. Assurance of Construction:

a. To ensure construction of the required improvements as set forth above in this Section (except those utility facilities specified in this Chapter), the subdivider shall deposit with the Town an amount in cash or a letter of credit equal to the amount of the cost of the work of each recorded increment (as determined by the Town Engineer) guaranteeing that the work will be completed in accordance with Town details and specifications. The letter of credit shall be executed by the subdivider, as principal, with a corporation duly authorized to transact business in the State of Arizona, as surety. The letter of credit or cash shall be released upon satisfactory performance of the work and its acceptance by the Town Engineer. The letter of credit may be canceled or the cash withdrawn by the subdivider, provided that other security satisfactory to the Town has been deposited which will cover the remaining obligations of the subdivider. The Town shall provide written acceptance of the other security prior to the subdivider canceling the letter or requesting release of security held as an assurance of construction.

b. Any alternative forms of assurance, such as a surety bond, must be approved by Town Council during the final plat approval process.

c. The duration of financial assurances shall be for thirteen (13) months, from the date of recording. Extension of time in one (1) year increments may be granted by the Council upon good cause. The assurance shall

remain in force and effect until it is released by the Council or has been authorized for partial release as provided herein.

d. The Town Engineer, upon receipt of a certification from the Engineer of Record, may authorize a reduction of the financial assurance for the work completed in accordance with the approved cost estimate and construction plans. Ten percent (10%) of the estimated cost of completed improvements shall be retained to insure sufficient funds remain to insure completion of the improvements, final inspections and preparation of final "as-built" plans.

e. In the event the subdivider defaults or fails or neglects to satisfactorily install the required improvements within one (1) year from the date of recording, the Town Council may declare the assurance forfeited, and the Town may make or cause the required improvements to be made, using the funds from the financial assurance to pay the full expense thereof. In addition, the Director shall notify the State Real Estate Commissioner of the default.

f. If good cause is shown by the subdivider, the Council may extend the term of the assurance and the time limit for completion of subdivision improvements.

11. Upon receiving certification from the Town Engineer and the assurances required by these Regulations, the Town Clerk shall cause the Final Plat to be recorded in the Office of the Yavapai County Recorder.

12. Inspection: The subdivider, using the services of an Arizona registered Professional Engineer and plans as approved by the Town Engineer, shall be responsible for the quality of all materials and workmanship. At the completion of the work, or not less than thirty (30) days

prior to the release date of the assurance, the Engineer of Record shall make an inspection of the improvements and shall submit a set of "as-built" construction plans, if complete, or a report on the status of improvements, if only partially complete, to the Town Engineer.

13. A fee may be imposed by the Council for the inspection by the Town Engineer.

14. Report to Council: The Town Engineer will review the "as-built" plans and/or report, with the subdivider's Engineer of Record and notify the subdivider of any noncompliance with the approved construction plans or with these Regulations. If the Town Engineer determines that compliance has been made, he will then submit a report to the Council, setting forth the conditions of such facilities.

15. Release: A certificate sealed by the Engineer of Record on the "as-built" plans stating that the construction has been completed in substantial conformance to the specifications and standards contained in or referred to herein, must be approved by the Town Engineer and presented to the Council prior to the final release of assurances. If all of the improvements comply with Town Standards, the Council shall release the guarantee. If the condition of materials or workmanship show unusual depreciation or does not comply with Town Standards, the Town Engineer may present this information to the Council who may declare the subdivider in default.

16. Once the improvements are approved and the assurances released, the Council shall review the improvements for acceptance into the Town system for maintenance.

17. If the Council approves the plat, the Town Clerk shall transcribe a certificate of approval upon the plat, first making certain that the other certifications required by these Regulations, have been duly signed.

ARTICLE 12-5 MINOR SUBDIVISION

Section 12-5-1 Minor Subdivision

The Minor Subdivision is a process developed to respond to the needs of property owners who are proposing subdivisions of ten (10) lots or fewer. The Preliminary Plat process is replaced by an administrative review by the Subdivision Committee. The Final Plat is still required for Minor Subdivisions, as is compliance with all requirements of Arizona Revised Statutes and compliance with all requirements of the Arizona Department of Real Estate.

Section 12-5-2 Outline of Minor Subdivision Procedures

The preparation, submittal, review, and approval of all Minor Subdivision Plats located in the Town limits shall proceed through the following progressive stages:

A. Stage I **Pre-Application Conference**
Refer to Section 12-4-2 of these regulations for submittal requirements and process.

B. Stage II **Minor Subdivision Plat**

Refer to Section 12-4-3 of this regulation for submittal requirements and process.
The Minor Subdivision Plat shall be reviewed by the Subdivision Committee.

C. Stage III **Technical Review**

Review to Section 12-4-4 of these regulations for submittal requirements and process.

D. Stage IV **Final Plat, Recording and Post Approval**

Refer to Section 12-4-5 of these regulations for submittal requirements and process.

Section 12-5-3 Minor Subdivision Preliminary Plat Review:

A. The Director shall distribute copies of the plat to the following:

1. Subdivision Committee:

a. Director of Community Development
b. Director of Public Works and/or Utilities Departments
c. Planning Commission Chair or designee.
d. Town Engineer
e. Police Department

2. The Yavapai County Flood Control District for review of flood control and drainage measures.

3. The Yavapai County Environmental Services for review of sewage disposal proposal.

4. Representatives of local utilities for review.

5. Where the land abuts a State Highway, to the Arizona Department of Transportation for recommendations regarding right-of-way and intersection design.

6. Clarkdale Fire District

B. The reviewers may be requested to transmit their recommendations to the Director in writing. The Director will then summarize the recommendations, prepare a report and present it to the Committee.

Section 12-5-4 Responsibilities of the Subdivision Committee:

The Subdivision Committee shall recommend for approval, conditional approval, or denial of the proposed Minor Subdivision Plat, as proposed, after considering the recommendations and findings of the Director and all other appropriate agencies, and testimony of the applicant.

A. Recommendation for approval by the Subdivision Committee shall be based on the following findings:

1. The proposed subdivision conforms to the adopted goals, objectives and policies of the Town.

2. The proposed subdivision, as reviewed and approved, will not be detrimental to the public health, safety, and general welfare.

3. Environmental concerns conform to adopted standards.

4. The design of the proposed subdivision is sensitive to the physical characteristics of the site.

5. The proposed subdivision is consistent with provisions and intents of Zoning Code requirements applicable to the property.

6. The proposed subdivision conforms to the improvement standards and design standards set forth in these Regulations and other applicable Town, County, State and Federal regulations.

B. If satisfied all objectives of these Regulations have been met, the Subdivision Committee shall recommend approval of the Minor Subdivision Plat. The Planning Commission Chair or designee shall sign one (1) copy of the Minor Subdivision Plat as recognition of approval and return to the subdivider. After recommending approval, the staff will notify the Town Clerk to schedule a public hearing on the matter before the Council, no sooner than twenty-one (21) days nor later than forty-six (46) days after the date of the Subdivision Committee's action.

C. If the Minor Subdivision Plat is generally acceptable but requires minor revision(s), the Subdivision Committee shall recommend for conditional approval, with the required revisions being noted in the meeting minutes. The staff will forward a copy of the minutes with the copies of the Minor Subdivision Plat to the Council.

D. If the Subdivision Committee finds the Minor Subdivision Plat requires major revision, the case shall be held over pending revision, re-submittal, processing and rescheduling for review.

Section 12-5-5 Appeals

If the Subdivision Committee finds that the Minor Subdivision Plat does not meet the requirements of these Subdivision Regulations, the subdivider may appeal this decision to the Council.

A. All appeals shall be made in writing and filed with the Council with a copy also filed with the Director setting forth the particulars and the reasons for the appeal.

B. Appeals must be made within thirty (30) days from the date of the findings of the Subdivision Committee.

C. The Council will hear such cases for appeal no later than thirty (30) days

after appeal is taken.

D. The Council shall decide appeals wherein it is alleged by the subdivider that there is error in any order, requirement, decision, grant or refusal made by the Subdivision Committee or any official in the administration of these Regulations.

E. The Council may approve, disapprove or approve with modifications, upon appeal or recommendation of the Subdivision Committee in specific cases, such variations as will not be contrary to the public interest, where, according to special conditions, a literal enforcement of these Regulations will result in unnecessary hardship, so the spirit of these Regulations shall be observed and substantial justice done.

Section 12-5-6 Significance of Minor Subdivision Plat Approval

Minor Subdivision Plat approval constitutes authorization for the subdivider to proceed with preparation of the engineering plans and specifications for public improvements. Minor Subdivision approval is subject to the following:

A. The basic considerations under which approval of the Minor Subdivision Plat is granted will not be changed prior to the expiration date of Minor Subdivision Plat approval.

B. Approval is valid for a period of twelve (12) months from the date of Council action. Requests can be made for one (1) year extensions up to a total of not more than three (3) years from the original date of approval. Extensions of the Minor Subdivision Plat approval may be granted by the Council upon receipt of a letter from the subdivider before the expiration date.

C. Minor Subdivision Plat approval, in itself, does not assure final acceptance of streets for dedication or continuation of existing zoning requirements for the tract or its environs. It does not constitute authorization to record the plat.

D. Compliance with all requirements of the Arizona Revised Statutes and compliance with all requirements of the Arizona Department of Real Estate.

ARTICLE 12-6 MINOR LAND DIVISIONS AND LOT LINE ADJUSTMENTS

Section 12-6-1 Purpose of Minor Land Divisions

A. Provide for the division of land into parcels or lots of two (2) or three (3) parts through a process that is more expeditious than the subdivision process.

B. Maintain accurate records of surveys created to divide existing parcels or lots.

C. Assure the proposed land division conforms to the standards established by the Town of Clarkdale.

D. Ensure adequate legal access to lots or parcels.

E. Ensure adequate emergency vehicle access to lots or parcels.

F. Ensure that Minor Land Division does not constitute a subdivision as defined in Zoning Code Section 12-2 or Arizona Revised Statutes Title 9.

Section 12-6-2 Applicability

A. The regulations contained in this Section shall apply to all divisions of land made within the corporate limits of the Town of Clarkdale since December 12, 1986, the effective date of revisions to the Town Code, whereby the division of any property into four (4) or more parcels shall proceed through the subdivision process and be subject to all of the provisions of Chapter 12 Subdivision Regulations of the Zoning Code of the Town of Clarkdale.

1. The division of improved or unimproved land or lands into two (2) or three (3) lots, tracts, or parcels, and which does not involve a new street, shall be subject to the provisions of this Section.

2. All other divisions or changes shall proceed through the Subdivision process.

Section 12-6-3 General Standards

A. All Minor Land Divisions shall be developed to comply with all requirements for the specific zoning district in which the divisions are located. At a minimum, these will include meeting the following, if applicable:

1. Minimum lot size
2. Minimum lot width
3. Minimum setbacks
4. Minimum yard or frontage requirements
5. Lot coverage and floor area ratio

B. No lot or parcel shall be divided so that any division of the lot contains more dwelling units than are permitted by the zoning district for which the lot or parcel is located.

C. No lot or parcel shall be divided so that any division of the lot results in a split zoning classification on a single lot or parcel.

D. No lot or parcel shall be divided so that any division of the lot or parcel results in the creation of a non-conforming structure or use.

E. No lot or parcel shall be divided so that any division of the lot results in a lack of legal access to any lots or parcels created by the division.

Section 12-6-4 Application Requirements

This section outlines the minimum information needed to enable the Town to make informed and expeditious decisions regarding applications for Minor Land Divisions. Unless exempted by the Director, the information contained in this Section shall be provided by each applicant. All mapped data shall be drawn to a scale of not greater than one inch equals one hundred feet (1" = 100'). Unless otherwise directed, the map data will be drawn on a sheet not to exceed twenty-four inches by thirty-six inches (24" x 36").

A. Minor Land Divisions:

1. Completed Minor Land Divisions Application

2. Two (2) paper copies and one (1) digital copy of a Minor Land Divisions Survey from a land surveyor registered in the State of Arizona) containing the following information:

   a. Title, which shall read "Minor Land Division Map for "(name of applicant)".

   b. Location by section, township, and range.

   c. Legal description of land involved.

   d. Name, address, email address and phone number of applicant and/or owner.

   e. Scale, north point, and dates of preparation and revisions.

   f. Existing streets (public or private), utility easements, and lot or parcel lines.

   g. Name, address, registration number, and seal of the registered land surveyor preparing the map.

   h. Boundaries of the tract to be divided fully balanced and closed showing all bearings and distances determined by an accurate survey in the field. All dimensions shall be shown in feet and decimals.

   i. Location and dimensions of all lots within the Minor Land Division Map. All sides of the proposed lots shall be identified by bearing and distances.

   j. All lots shall be identified by number or letter.

   k. Proposed street dedications or private access easements, as well as public utility easements, shall be identified by course, length and width.

   l. If questions pertaining to property boundaries develop, the Community Development Department may require location of all existing physical and natural features, including, but not limited to, buildings, structures, bridges, culverts, within the Minor Land Division boundaries. The applicant shall also identify any of those features which are to be

removed.

m. The map shall include provisions for signatures by the Director and the Town Engineer and the date of approval.

n. Identify any public utility extensions or upgrades, when required, to serve proposed land division.

o. Any ingress or street improvements necessary to ensure compliance with emergency vehicle access, dust abatement, and drainage improvements necessary to mitigate any negative effects on current public infrastructure adjacent to and/or fronting the proposed land division.

p. Other information as deemed applicable by the Director to enable the Town to determine the compliance of the Minor Land Division with applicable ordinances and regulations.

3. Payment of a fee for review of the application.

4. Documentation of the land division history of the parcel proposed to be divided in the form of a chain of title or a history of the ownership of the parcel proposed to be split, dating back to December 12, 1986, the effective date of the Code; the chain of title or history of ownership shall be provided so as to determine whether or not the proposed land split constitutes a subdivision. Such documentation shall be presented by a recognized title company doing business in the state of Arizona in the form of a title history search, copies of deeds, or County Assessor's records and maps.

Section 12-6-5 Application Process

A. Pre-Application Process

1. The applicant shall meet with the Director to discuss the proposed Minor Land Division. The Director shall advise the applicant of the specific objectives of this Section and the specific procedures, standards, and approval process regarding the review of the application.

B. Submittal of Application to the Community Development Department

1. The Director, or their designee, shall check all submittals to ensure the application complies with the objectives and standards of this Ordinance and the General Plan. It shall be the responsibility of the Community Development Department to ensure all relevant departments, utilities, and other agencies receive copies for review. The following information is required at the time of application:

    a. Completed application form

    b. Application fee

    c. Completed land division survey as noted in Section 12-5-4-4-A.2 above.

    d. The chain of title or history of the ownership of the parcel proposed to be split.

C. Decision of Director

1. Upon receipt of a completed application, the Director, or their designee, shall approve or deny the Permit within thirty (30) days. A denial may be based only upon one (1) or more, of the following findings:

    a. Parcels resulting from the division do not conform to applicable zoning regulations.

    b. The division of land results in a subdivision as defined in the Subdivision Regulations.

    c. One (1), or more, of the resulting parcels are landlocked.

D. Appeals

1. Appeals to the Board of Adjustment may be taken by any applicant aggrieved by a decision of any administrative office made in the enforcement of these regulations.

E. Actions after Approval: If approved, the applicant shall submit the following:

1. Two copies, plus one digital copy, of a final, recordable, reproducible, mylar map twenty-four inches by thirty-six inches (24" x 36") consistent with the approved plan showing all lot, tract or parcel corners, dimensions, a complete legal description of the site and of each lot, track or parcel, and signature block for the Director.

2. Upon written approval by the Director, applicant shall record the Minor Land Division map with the Yavapai County Recorder's Office. Said recording shall occur within sixty (60) days of approval, or the Minor Land Division shall automatically become null and void. A copy of the recorded land division shall be provided to the Community Development Department after being recorded.

Section 12-6-6 Conspiracy to Subdivide

Any Minor Land Division or sequence of divisions which are the result of two (2) or more individuals, firms, partnerships or corporations conspiring together to create four (4) or more parcels of land shall be deemed a subdivision and subject to all provisions of the Town of Clarkdale Subdivision Ordinance.

Section 12-6-7 Purpose of Lot Line Adjustment

The Lot Line Adjustment is an agreement between adjoining property owners to adjust a common boundary line. No new lots or parcels are created. For purposes of this Section, a Lot Line Adjustment shall include the following acts:

A. The Lot Line Adjustment between owners of adjoining properties solely for the purpose of revisions to common boundary lines; and,

B. Additional lots are not being created; and,

C. Any lot remaining after the Lot Line Adjustment shall contain at least the minimum lot size, setback, frontage as required by the Zoning Code, and shall meet all other lot standards of the Town of Clarkdale's Zoning Code.

Section 12-6-8 General Standards

A. All Lot Line Adjustments shall be developed to comply with all requirements for the specific zoning district in which the divisions are located. At a minimum, these will include meeting the following, if applicable:

1. Minimum lot size

2. Minimum lot width

3. Minimum setbacks

4. Minimum yard or frontage requirements

5. Lot coverage and floor area ratio

B. No Lot Line Adjustment shall result in more dwelling units than are permitted by the zoning district for which the lot or parcel is located.

C. No Lot Line Adjustment shall results in a split zoning classification on a single lot or parcel.

D. No Lot Line Adjustment shall result in the creation of a non-conforming structure or use.

E. No Lot Line Adjustment shall result in a lack of legal access to any lots or parcels created by the division.

Section 12-6-9 Application Requirements

This section outlines the minimum information needed to enable the Town to make informed and expeditious decisions regarding applications for Lot Line Adjustments. Unless exempted by the Director, the information contained in this Section shall be provided by each applicant. All mapped data shall be drawn to a scale of not greater than one inch equals one hundred feet (1" = 100'). Unless otherwise directed, the map data will be drawn on a sheet not to exceed twenty-four inches by thirty-six inches (24" x 36").

A. Lot Line Adjustments:

1. Completed Lot Line Adjustment Application

2. Lot Line Adjustment Survey, two paper (2) copies plus one digital copy, completed by a registered land surveyor in the State of Arizona); and,

3. Payment of the Application Fee.

Section 12-6-10 Application Process

An application for Lot Line Adjustment shall be submitted to the Director with the required copies of the lot line adjustment survey and the application fee. The Director shall have thirty (30) working days to approve or reject the application. If approved by the Director, the land survey shall be recorded by the applicant in the office of the Yavapai County Recorder within ten (10) calendar days. A copy of the recorded Lot Line Adjustment shall be provided to the Community Development Department after recording. If rejected, written notice shall be provided to the applicant via first class mail, postmarked within ten (10) days after the expiration of the thirty (30) day review period. The written notice shall specify the reasons for denial.

A. Appeals:

Appeals to the Board of Adjustment may be taken by any applicant aggrieved by a decision of any administrative office made in the enforcement of these regulations (see **Section 17-2-3** of the Town Code for the appeal procedure).

B. Actions after Approval: If application is approved the applicant shall submit the following:

1. A final, recordable, reproducible, mylar map twenty-four inches by thirty-six inches (24" x 36") consistent with the approved plan showing all lot, tract or parcel corners, dimensions, a complete legal description of the site and of each lot, track, or parcel, and signature block for the Director.

2. Upon written approval by the Director, the applicant shall record the Lot Line Adjustment map with the Yavapai County Recorder's Office. Said recording shall occur within sixty (60) days of approval or the Lot Line Adjustment shall automatically become null and void. A copy of the recorded land division shall be provided to the Community Development Department after being recorded.

Section 12-6-11 Roadway Standards for Minor Subdivisions

The following roadway standards shall be used in the consideration of Minor Subdivisions. In all other respects the Design Principles will be the same as for any other roadway within a subdivision.

Between 2 and 3 lots -	Private Street Standard expanded to include a twenty-five foot (25') right-of-way.
From 4 to 6 lots -	Rural Lane Standard
From 7 to 10 lots -	Rural Local Standard

Roadways required as outlined above shall be provided along the entire frontage of the lots being created and must be provided with required right-of-ways that are dedicated and constructed in accordance with the provisions of the Subdivision Regulations following the approval of Council of the Final Plat and prior to the issuance of any building permits for the lots. Each of the deeds created for the resulting lots must carry a notation pointing out the responsibility of the property owner to improve the roadway to the required standard prior to issuance of building permit. All new roadways to be dedicated to the Town must be constructed to the minimum requirements as approved by the Town Engineer and the Director of Public Works and/or Utilities Departments.

Any lots created that would have their frontage on what is indicated in the General Plan of the Town of Clarkdale (as it may be amended) as existing or proposed Collector or Arterial streets shall provide the minimum right-of-way for that street type.

All street right-of-ways shall also include an adjacent minimum eight foot (8') Public Utility Easement, on one (1) side for the entire length of the street segment.

ARTICLE 12-7 PUBLIC IMPROVEMENT STANDARDS

Section 12-7-1 Purpose

A. It is the purpose of this Section to establish in outline the minimum acceptable standards for improvement of streets and utilities, to define the responsibility of the subdivider in planning, constructing and financing improvements and to establish procedures for review and approval of engineering plans.

B. All improvements in streets or easements which are required as a condition to plat approval shall be the responsibility of the subdivider.

Section 12-7-2 Improvement Plans

A. A complete set of engineering plans for construction of all required improvements shall be prepared by an engineer registered in Arizona. Such plans shall be based on those approved during the Preliminary Plat and the Technical Review stages.

B. Final construction plans for all improvements shall be approved and signed by the Town Engineer prior to the approval of the Final Plat.

Section 12-7-3 Construction and Inspection

A. All improvements, whether public or private, shall be constructed to the latest standards and specifications adopted by the Town.

B. All improvements in the public right-of-way shall be constructed under the inspection and approval of the Town Engineer and/or the Director of Public Works and/or Utilities Departments. Construction shall not commence until a permit has been issued for such construction. Work shall not be discontinued or suspended unless first approved by the Town and work shall not resume prior to notification and approval of the Town.

C. All underground utilities to be installed in the street shall be constructed prior to the surfacing of such street.

D. All relocations and reconstruction of irrigation facilities shall be done to standards of the owning utility and the Town Engineer.

E. Improvements proposed or required on County or State highway right-of-way shall be included in the improvement plans and designed to the applicable County or State standards. Prior to approval by the Town Engineer, the subdivider shall acquire the approval of such improvements by the applicable County or State authorities, as directed by the Town Engineer.

F. Underground utilities may be extended and easements shall be required to the boundaries of the plat to provide service connections to abutting unsubdivided land.

Section 12-7-4 Required Improvements

A. Streets:

1. All streets and alleys, both public and private, within the subdivision, including perimeter streets or half-streets, shall be improved in accordance with Section 12-3 of these Regulations.

2. Where there are existing streets adjacent to the subdivision, subdivision streets shall be improved to the intercepting paving line of existing streets.

3. Dead-end streets serving more than four (4) lots shall be provided with an improved temporary turning circle.

4. When a major collector or arterial street is included, or is a perimeter street, the Town may pay for such extra width paving as deemed appropriate by the Town.

B. Where curbs and/or sidewalks are required, they shall be paved with portland cement to the latest MAG standards or the latest standards and specifications of the Town Code, if the Town Code is more restrictive.

C. Water;

1. All lots will be supplied with public or private piped water unless the lots are larger than seventy thousand (70,000) square feet in area. Supplied water shall be of sufficient volume and at a minimum pressure of twenty pounds per square inch (20 PSI) for domestic use and fire protection. All lines shall be designed to the standards of Arizona Department of Environmental Quality (ADEQ).

2. If water is supplied by a public or private water company, the minimum service connection shall be three-quarter inch (3/4") to each lot.

3. If water is supplied by a public or private water company, then fire hydrants shall be installed in the subdivision at locations and to grades approved by the Water Company, Town Engineer and the Fire District, and in conformance with Town and Uniform Fire Code Standards.

4. If water service is not available from a public or private water company then a statement of water adequacy from the Arizona Department of Water Resources will be required.

D. Sewers:

1. If the subdivision is within twenty-five feet (25') per lot (i.e. 250 feet for 10 lots, 1,250 feet for 50 lots) of an available sanitary sewer then, each lot shall be supplied with connection to such sewer with lines designed to Town, County, and State standards.

2. If connection to a public sewer system is not required, the Town shall require the installation of capped sewer mains, if the average subdivision lot is less than two (2) acres in area.

3. When connection to a sanitary sewer system is not available, septic tanks or other disposal systems may be permitted provided a statement is submitted from the County Health Department certifying that field investigation has determined ground slopes and soil conditions will allow for satisfactory disposal by this method with the lot arrangement and size as depicted on the subdivision plan.

E. Gas service may be furnished according to current supplies as determined by the franchise supplier.

F. Utilities:

1. New utilities including, but not limited to electric, internet fiber optics, communication and television cable shall be installed underground.

2. When overhead utility lines exist within the property being platted,

including boundary easements, said existing overhead utility lines and the new installations within the platted area shall be placed underground.

3. When overhead utility lines exist on the boundary of the property being platted, said existing overhead utility lines, and any additions or replacements needed to increase capacity or improve service reliability, may remain overhead, provided however, that any service drops into the platted area from said peripheral overhead lines shall be underground.

4. Electric lines greater than three thousand Kilovolt Amps (3,000 KVA) capacity shall be exempt from being placed underground.

5. Exception may be granted if the Commission recommends that due to soil or other natural features is impractical to place the utility underground.

6. Design of all underground utilities shall be coordinated to prevent issues and/or conflicts. All utilities shall be installed in a manner consistent with separations required by local county and state agencies.

7. The subdivider shall make the necessary arrangements with each of the serving utility companies involved for the installation of the underground facilities. Letters from each utility company indicating such arrangements have been made shall be submitted to the Director prior to submittal of the Final Plat.

G. Storm Drainage and Detention:

1. The subdivider shall make provisions for the disposal of storm water entering, as well as initiated in the subdivision, in accordance with plans approved by the Yavapai County Flood Control District and the Town Engineer.

2. The hydrologic function of existing major water courses shall be protected.

3. Complete hydrology and hydrological design computations and a Phase III County Flood Control Report shall accompany the plans and shall be approved by the Town Engineer before recordation of the Final Plat.

4. Increases in on-site storm runoff due to development shall be addressed in the hydrologic/hydrological analysis and shall meet the criteria set forth in the most recent Yavapai County Flood Control District Reference Storm Water Detention Material.

5. Once constructed and approved by the Town, the drainage and detention facilities shall not be modified unless such modification is approved by the Town Engineer.

H. Street lights shall be required and installed in accordance with Town Standards. Installation, or partial installation in residential and industrial subdivisions, may be waived by the Council. Solar street light designs are encouraged and may be required.

I. Street Name and Traffic Control Signs:

1. All streets in a subdivision shall be named and identified by signs installed at every street intersection.

2. Traffic control devices shall be installed as recommended by the Town Police Department and Public Works Department.

3. All signs and devices shall be standard as indicated by Town policy and as approved by the Director of Public Works and/or Utilities Departments.

J. Monuments:

1. Permanent monuments shall be installed as approved by the Town Engineer, at all corners, angle points, points of curve and at all street intersections for streets within and around the perimeter of the subdivision and at such other locations as determined by the Town Engineer.

2. A permanent marker acceptable to the Town Engineer shall be set at all corners, angle points and points of curve for each lot within the subdivision prior to the recording of the plat.

3. After all monuments have been installed, a registered land surveyor shall check the location of the monuments and certify their accuracy.

K. Appropriate buffering may be required to separate residential lots from

arterial and collector streets if said residential lots back to such streets.

L. Landscaping or retaining walls may be required by the Town Engineer to prevent erosion on areas of cut or fill.

M. As a condition of Final Plat approval, the Commission and Council may require a subdivider to pay a pro rata share of the cost, or agree to install the necessary street, sewerage, drainage and other improvements, including land and easements, located off-site of the property limits of the subdivision but necessitated or required by the development. "Necessary" improvements are those reasonably related to the proposed subdivision. The Commission and Council shall provide in its resolution of Preliminary Plat approval the basis of the required improvements. The capacity and design of proposed improvements shall be based upon the recommendations of the Town Engineer, the Yavapai County Flood Control District, the Arizona Department of Transportation (ADOT), and the adopted Town Circulation Plan, Sewer Plan, Drainage Plan, General Plan or other adopted improvement plans. At the discretion of the Council, pro rata funds may be deposited into an escrow account for future construction if it is deemed by the Council that it is in the interest of the Town to delay construction of said improvements. In no case shall the delay be more than six (6) years and in the case that the Town elects to not construct the improvements within six (6) years, the funds will be returned to the subdivider with interest paid at the same rate of interest that the Town received on the funds.

N. Upon completion of development, the subdivider's Engineer of Record shall provide and certify a set of "as-built" construction plans to the Town Engineer, stating that all required improvements have been completed in substantial conformance to the specifications and standards contained in or referred to herein.

Exhibit A - Residential Collector

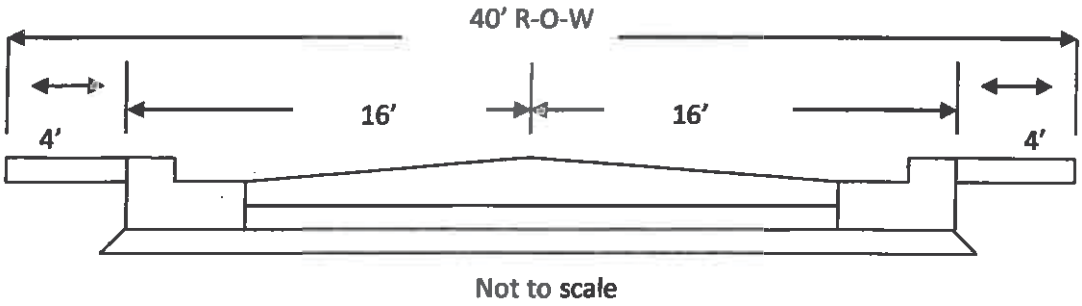

Not to scale

R-O-W Width	40 feet
Improved Roadway	28 feet Back of Curb/Back of Curb
Surface	2 inches asphalt with 6 inches Base **or** 3 inches asphalt with 4 inches Base
Base	ABC (Aggregate Base Course)
Subgrade	6 inches minimum
Curb/gutter	6 inches vertical – 2 foot horizontal
Shoulders	None
Ditches	None
Maximum ADT	3,000
Sidewalk	4 feet Minimum
Crown	2% Minimum
Grade	7% Maximum

Exhibit B - Residential Local

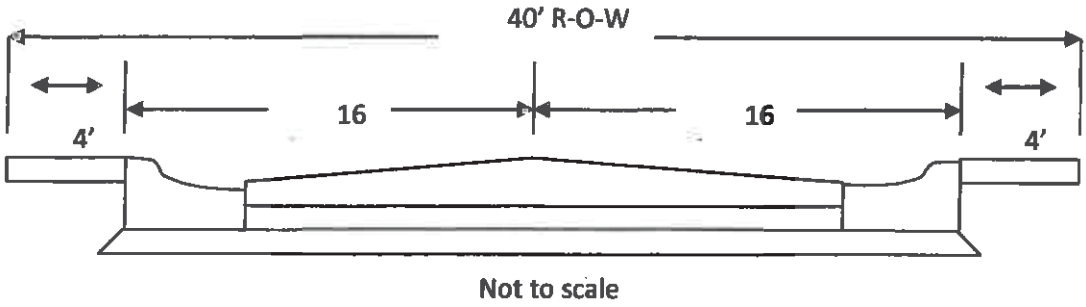

R-O-W Width	40 feet
Improved Roadway	28 feet Back of Curb/Back of Curb
Surface	2 inches asphalt with 6 inches Base **or** 3 inches asphalt with 4 inches Base
Base	ABC
Subgrade	6 inches minimum
Curb/gutter	Rolled Curb
Shoulders	None
Ditches	None
Maximum ADT	500
Sidewalk	4 feet Minimum
Crown	2% Minimum
Grade	10% Maximum

Exhibit C - Rural Collector

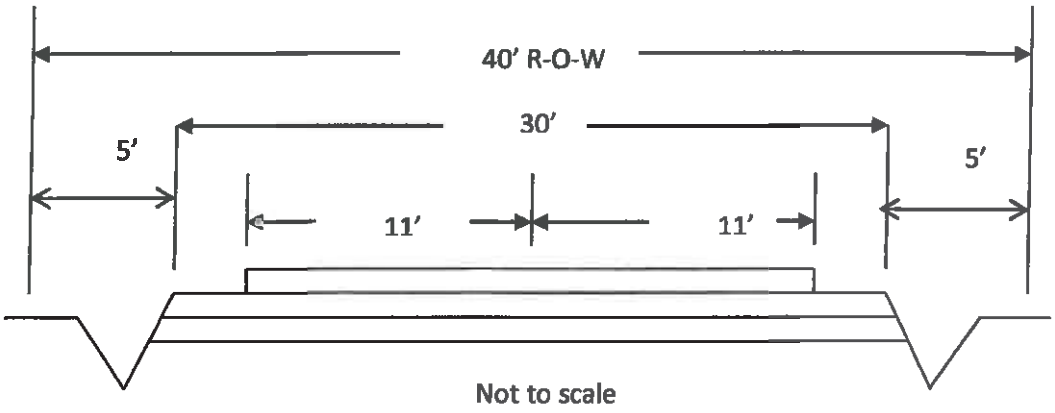

R-O-W Width	40 feet
Improved Roadway	22 feet from edge of pavement to edge of pavement
Surface	2 inches asphalt with 6 inches Base **or** 3 inches asphalt with 4 inches Base
Base	ABC
Subgrade	6 inches minimum
Curb/gutter	None
Shoulders	4 inches graded
Ditches	1.5:1 Maximum Slope, Minimum depth to be determined by grading plan and approved by the Town Engineer
Maximum ADT	3,000
Sidewalk	None
Crown	2% Minimum (not indicated on example)
Grade	7% Maximum

Exhibit D -Rural Local

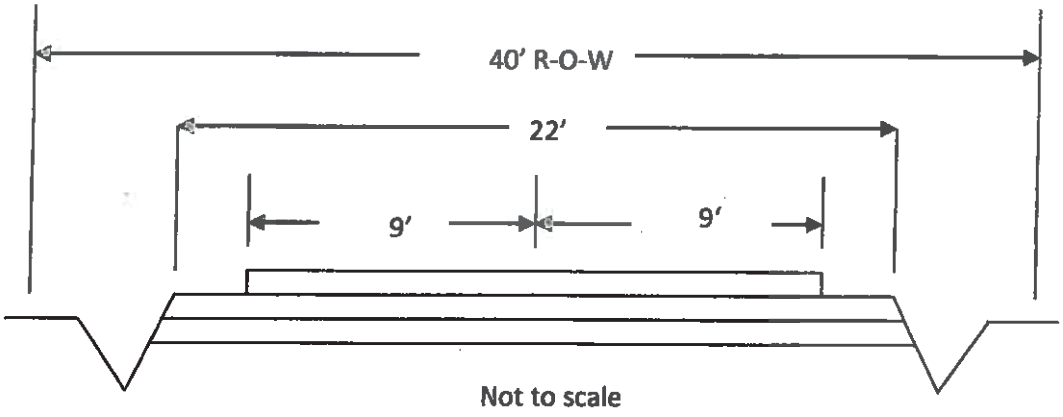

R-O-W Width	40 feet
Improved Roadway	18 feet Edge of pavement/Edge of pavement
Surface	2 inches asphalt with 6 inches Base **or** 3 inches asphalt with 4 inches Base
Base	ABC
Subgrade	6 inches minimum
Curb/gutter	No
Shoulders	2 feet graded
Ditches	1.5:1 Maximum Slope, Minimum depth to be determined by grading plan and approved by the Town Engineer
Maximum ADT	500
Sidewalk	No
Crown	2% Minimum (not indicated on example)
Grade	10% Maximum

Exhibit E -Rural Lane

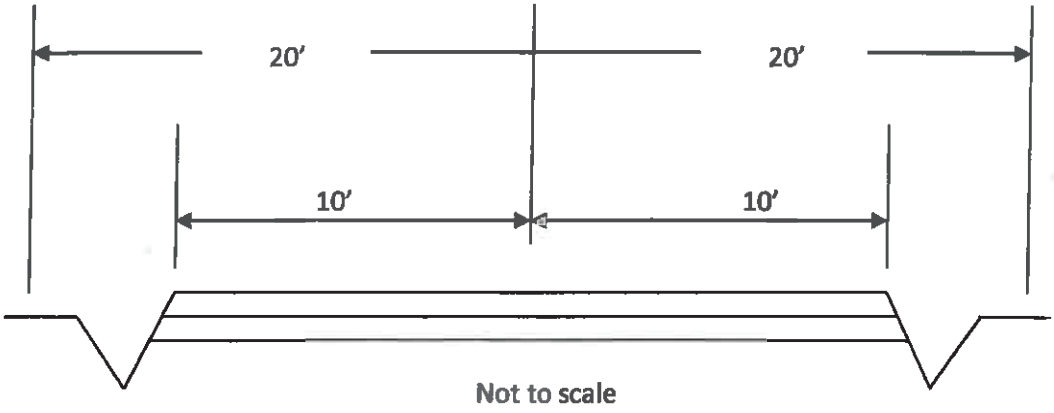

Not to scale

R-O-W Width	40 feet
Improved Roadway	20 feet from edge of ABC to edge of ABC
Surface	4 inches ABC
Subgrade	6 inches minimum
Curb/gutter	No
Shoulders	None
Ditches	Yes - 1.5:1 Maximum Slope, Minimum depth to be determined by grading plan and approved by the Town Engineer
Maximum ADT	250
Sidewalk	None
Crown	2% Minimum (not indicated on example)
Grade	12% Maximum

Exhibit F- Private Street

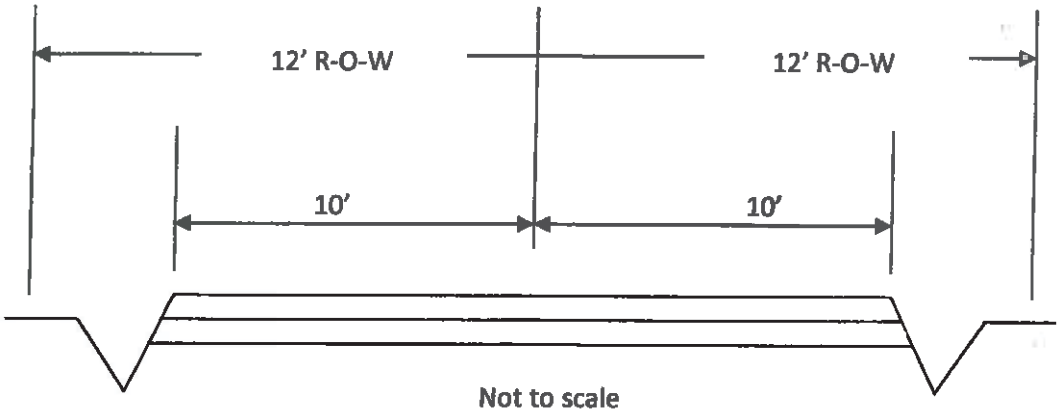

Easement Width	24 feet unless the street is designated on the general plan as requiring additional width
Improved Roadway	20 feet minimum between ditches
Surface	4 inches compacted ABC
Subgrade	6 inches. Town Engineer may amend the requirement for new subgrade if the grading report substantiates that adequate subgrade currently exists
Curb/gutter	No
Shoulders	None
Ditches	Yes - 1.5:1 Maximum slope, minimum depth to be determined by grading plan and approved by the Town Engineer
Maximum ADT	N/A
Sidewalk	None
Crown	2% Minimum (not indicated on example)
Grade	12% Maximum
Utility Easement	8 feet minimum on at least one side unless 8 feet on both sides is required by utility companies

Exhibit G- Cul-de-sac

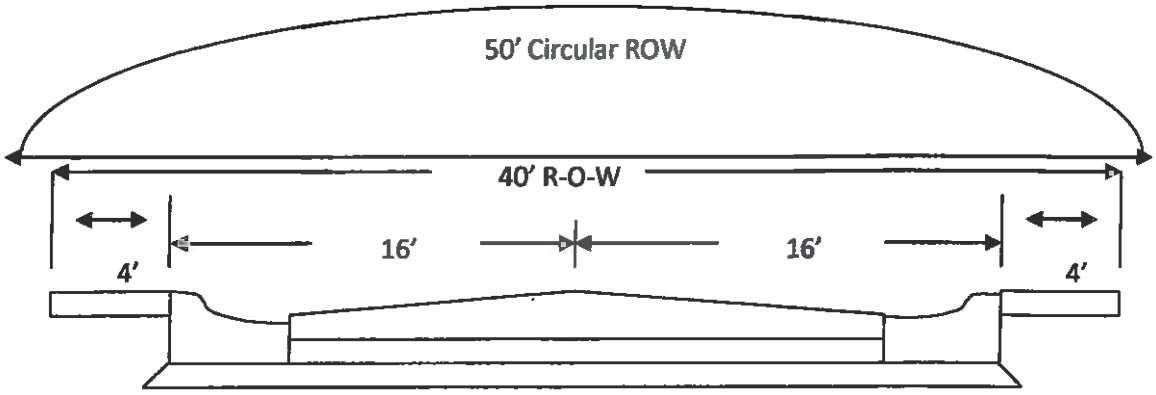

Not to scale

R-O-W Width	50 feet
Improved Roadway	40 foot, with a 40-foot radius turning circle at termination
Surface	2 inches asphalt with 6 inches base/ or 3 inches asphalt with 4 inches base
Base	ABC
Subgrade	6 inches minimum
Curb/gutter	Rolled Curb
Shoulders	None
Ditches	None
Maximum ADT	500
Sidewalk	4 feet Minimum
Crown	2% Minimum
Grade	10% Maximum
Maximum Length	600 feet

Figure 1 TRIP GENERATION RATES BY LAND USE CATEGORIES

Land Use Type		Average Weekday Trip Generation Rates
Residential		**Per dwelling unit**
Single Family Detached		10.1
Condominium		5.9
Apartment		6.6
Mobile Home Park		4.8
Office Building		**Per 1,000 square foot of Building**
General Office Building:		
	10 M square feet	24.4
	50 M square feet	16.3
	100 M square feet	13.7
	200 M square feet	11.5
	500 M square feet	9.2
Medical Office Building		34.2
Office Park		11.4
Research Center		6.1
Retail		**Per 1,000 square foot of Building**
Specialty Retail		40.7
Discount Store		71.2
Shopping Center:		
	10 M square feet	166.4
	50 M square feet	94.7
	100 M square feet	74.3
	200 M square feet	58.9
	500 M square feet	39.9
	1000 M square feet	33.4
Industrial		**Per 1,000 square feet of Building**
Light Industrial		7.0
Heavy Industrial		1.5
Industrial Park		7.0
Manufacturing		3.9
Warehouse		4.9
Mini-Warehouse		2.6
Lodging		**Per Room**
Motel		10.2

Trip rates from other sources may be used if the applicant demonstrates that these sources better reflect local conditions.

Figure 2 STREET CLASSIFICATION AND MINIMUM DESIGN STANDARDS

Street Class	Street Category	Travel Lane Width	Parking Lane Width	Total Improved Width	Curb or Shoulder	Graded Areas or Sidewalk	Surface	ROW/ Easement Width	Maximum Avg. Daily Traffic (ADT)	Design Speed MPH
I	Arterial	12'	None	60'	Vertical	Sidewalk		76'	3,000+	55
II	Industrial	12'	12'	48'	Rolled	Graded		64'	3,000	40
III	Commercial	12'	8'	40'	Vertical	Sidewalk		60'	3,000	40
IV	Residential Collector	16'	None	28'	Vertical	Sidewalk	2" w/6" base or 3"w/4" base	40'	3,000	40
V	Residential Local	16'	One side only	28'	Rolled	Sidewalk	2" w/6" base or 3"w/4" base	40'	500	25
VI	Rural Collector*	11'	None	22'	4' Shoulder Ditch****	Graded	2" w/6" base or 3"w/4" base	40'	3,000	40
VII	Rural Local*	9'	None	18'	2' Shoulder Ditch****	Graded	2" w/6" base or 3"w/4" base	40'	500	25
VIII	Rural Lane	10'	None	20'	None/Ditch****	Graded	4" ABC w/6" Subgrade	40'	250	25
IX	Alley	10'	None	20'	None	None	4" ABC	20'	500	10
X	Private Street	12'	None	20'	None/Ditch****	None	4" ABC w/6" Subgrade**	24'***		

*

Rural street standards may be used only in residential areas developed with minimum lot sizes of 20,000 square feet.
**Town Engineer may waive the requirement for improved subgrade if adequate subgrade exits
***A minimum 8' utility easement is required along only one side of a private street unless the utility companies request an 8' easement along both sides
**** Depth of the required ditch shall be determined by the Town Engineer upon review and approval of the required grading plans.

Figure 3 STREET CURVE AND DESIGN DATA

Street Class	Improved Surface	R-O-W	Radius	Length	Reverse Curb Tangent*	Intersection Tangent**	Minimum Corner Radius	Maximum Grade	Minimum Sight Distance
I	60 feet	76 feet	1,400 feet	500 feet	500 feet	475 feet	30 feet	***	770 feet
II	48 feet	64 feet	800 feet	300 feet	200 feet	300 feet	25 feet	7%	560 feet
III	40 feet	60 feet	800 feet	300 feet	200 feet	300 feet	25 feet	7%	560 feet
IV	24 feet	40 feet	800 feet	300 feet	200 feet	300 feet	25 feet	7%	560 feet
V	24 feet	40 feet	300 feet	100 feet	0 feet	200 feet	25 feet	10%	420 feet
VI	22 feet	40 feet	800 feet	300 feet	200 feet	300 feet	25 feet	7%	560 feet
VII	18 feet	40 feet	300 feet	100 feet	0 feet	200 feet	25 feet	10%	420 feet
VIII	20 feet	40 feet	300 feet	100 feet	0 feet	200 feet	25 feet	12%	350 feet

* Minimum length of tangent between curves in opposite directions (reverse curves). Reverse curves without tangent sections between curves are not permitted, except on local streets.

** Minimum length of tangent at intersections is measured from the Right-Of Way line of the intersecting street. Tangents approaching an intersection may vary in length with increased design speed.

*** As determined by the Town Engineer.

Figure 4 ROADWAY STANDARDS FOR MINOR SUBDIVISIONS

# of lots in subdivision	Required Road Standard	Required Surface	Minimum ROW
2-3 lots	Private Street Standard expanded to include a twenty-five (25) foot right-of-way	2" w/6" base	25'
4-6 lots	Rural Lane Standard	2" w/6" base	40'
7-10 lots	Rural Local Standard	2" w/6" base	40'

Roadways required as outlined above shall be provided along the entire frontage of the lots being created and must be provided with required right-of-ways that are dedicated and constructed in accordance with the provisions of the Subdivision Regulations following the approval of Council of the Final Plant and prior to the issuance of any building permits for the lots.

All roadways dedicated to the Town must meet adopted Town standards and be approved by the Public Works Director.

Each of the deeds created for the resulting lots must carry a notation pointing out the responsibility of the property owner to improve the roadway to the required standard prior to issuance of building permit.

Any lots created that would have their frontage on what is indicated in the General Plan of the Town of Clarkdale as existing or proposed Collector or Arterial streets shall provide the minimum right-of-way for that street type.

All street right-of-ways shall also include an adjacent minimum eight (8) foot Public Utility Easement, on one side, the entire length of the street segment.

Figure 5 SIGNATURE BLOCKS FOR MYLARS

Documents that need Signature Blocks	When they will need to be signed	Titles for Signature Blocks
Planned Area Development (PAD) ▪ Preliminary Plat	After Preliminary Plat approval by Town Council	Mayor ▪ Town Clerk
Planned Area Development (PAD) ▪ Final Plat	After Final Plat approval by Town Council	▪ Mayor ▪ Town Clerk
Subdivision ▪ Preliminary Plat	After Preliminary Plat approval by Town Council	▪ Mayor ▪ Town Clerk
Subdivision ▪ Final Plat	After Final Plat approval by Town Council	▪ Mayor ▪ Town Clerk
Minor Subdivision ▪ Minor Subdivision Plat	After Minor Subdivision Plat approval by Town Council	▪ Planning Commission Chair ▪ Town Clerk
Minor Subdivision ▪ Final Plat	After Final Plat approval by Town Council	▪ Mayor ▪ Town Clerk
Minor Land Division	After approval by Director of Community Development	▪ Community Development Director
Lot Line Adjustment	After approval by Director of Community Development	▪ Community Development Director

SECTION 2: That all Ordinances and part of Ordinances in conflict with the provisions of this Ordinance or any part of this document adopted herein by reference are hereby repealed.

SECTION 3: If any section, subsection, sentence, clause, phrase or portion of this Ordinance or any part of this document adopted herein is for any reason held to be invalid or unconstitutional by the decision of any court of competent jurisdiction, such decision shall not affect the validity of the remaining portions thereof.

SECTION 4: This ordinance shall take effect and be in force thirty (30) days after passage by the Council and approval by the Mayor.

PASSED AND ADOPTED by the Mayor and Common Council of the Town of Clarkdale, Arizona, this_____ day of May, 2012.

_____
Doug Von Gausig

ATTEST:

_____
Kathy Bainbridge, Town Clerk

APPROVED AS TO FORM:

_____
Robert S. Pecharich, Town Attorney

Staff Report

Agenda Item: WORKSESSION
Discussion regarding the 89A Corridor Commercial Overlay District

Staff Contact: Beth Escobar

Meeting Date: September 18, 2012

Background:

The 89A Corridor Commercial Overlay District, Section 3-14 of the Zoning Code, was adopted by ordinance on September 12, 2006. The Ordinance attempts to guide commercial development along the highway corridor between Cottonwood and Clarkdale. The Ordinance encourages preservation of open space and pedestrian connections and attempts to guide development in clusters, instead of a 'strip mall' model.

As the Commission is aware, very little development activity has occurred in this area since adoption of the Overlay District. It is important to remember the Ordinance was adopted prior to approval of ADOT's final design of the section of SR 89A between Cottonwood and Clarkdale. When the Ordinance was crafted and reviewed, the assumption for this corridor was it would develop as a series of stop-lights. The round-a-bouts constructed instead create natural focus areas. The central median will restrict highway access along the corridor.

Recently, staff began analyzing the Ordinance in greater detail in response to an inquiry regarding a parcel located at the intersection of SR 89A and Lisa Street. During this analysis several issues and concerns regarding practical application of the Ordinance were identified.

1. **50-foot front setback requirement**

The Design Guidelines Section contains the following language:

> 'Construction envelope setbacks shall be fifty feet in the front yard. Side and rear yard setbacks for the overall master planned limited commercial node shall be limited to the exterior boundary of the master planned area. This shall be a minimum of fifty feet. Side and rear yard setbacks for interior parcels may be zero so building development may occur in clusters.'

The requirement of a fifty-foot front yard setback appears to be in conflict with the goal to promote pedestrian friendly development. Current trends in community planning, including Form Based Code Planning, encourage storefronts to border pedestrian walkways.

The 50-foot setback requirement drives development away from the new sidewalks along the highway corridor, losing the optimum pedestrian connection. Developers may decide the easiest way to developing their properties would be to draw a line down the middle, and develop the back half of the property. Since many of the commercial properties are narrow and deep, this constriction would compress the development. Staff has prepared an exhibit (Exhibit A) showing how the property might develop under the restrictions of the Overlay District, and how it might develop in a more pedestrian centered and visually appealing manner.

2. Lot coverage maximum of 50 percent.

Additional language in the Design Guidelines Section of the Ordinance states:

> 'Lot coverage allowed for building, parking, driveways, and accessory buildings is fifty percent with fifty percent of the parcel's gross area maintained as permanent undisturbed desert.'

Staff cannot find any documentation explaining the reasoning behind this restriction. Nor is there any evidence this specific requirement was reviewed by the Town Attorney. Staff is concerned this portion of the Ordinance provides grounds for a regulatory-taking law suit. Even before Prop 207, legislation was in place in United States to allow property owners to sue for fair compensation when a government regulates a property to such a degree it diminishes the value of the property. The underlying Commercial Zoning of the Overlay District does not contain lot coverage or floor area ratio maximums. Hypothetically, properties with Commercial zoning not adjacent to residentially zoned property could be developed from property line to property line. The Overlay District reduces the developable portion of the properties within the district by 50 percent.

It is standard planning practice to calculate lot coverage and floor area ratio based on 'under roof' square footage which does not include parking areas or driveways. In staff's opinion, the inclusion of parking areas and driveways in the 50-percent lot coverage maximum will compress the building and parking areas. In order to obtain the optimum building size, parking and access will be designed to be linear, actually creating a 'strip mall' effect.

3. Landscape Requirements.

The Design Guidelines require 'fifty percent of the parcel's gross area be maintained as permanent undisturbed desert. This assumes all of the existing vegetation on the undisturbed portion is worth retaining and releases the developer from planting new, appropriate, landscaping as part of the development.

The requirement to keep 50-percent of the property as undisturbed desert constricts the development of a comprehensive, attractive landscape plan. If the 50-foot front setback is included in the undisturbed area, this does not necessarily create an attractive street frontage. (See Exhibit B)

4. Viewshed protection

The Ordinance attempts to preserve viewsheds along the corridor; however there are no applicable guidelines included in the code. Section C defines what a viewshed is, however the Ordinance does not include any provisions to preserve a viewshed. In Section D, developers are required to identify potential view corridors; however there is no preservation requirement in this Section either. The lack of specifics in this section of the code would make it hard to enforce.

5. Comprehensive Development

The overlay district applies all along the highway corridor for a width of 500 feet from the highway centerline. A map of the entire district is included at the end of this report.

Several large parcels along the highway corridor have a portion of the property within the overlay district and a portion of the property outside of the district boundary. This will make it challenging to develop the parcels in a comprehensive manner.

Two significant commercially zoned properties along the corridor, the first at the intersection of Clarkdale Parkway and SR 89A, the second the commercial area to the north of Mescal Spur, are bisected by the overlay district. (See Exhibit C). It would be difficult to develop these properties comprehensively under two sets of requirements.

Summary

Staff sees three possible alternatives to address the discordances in the existing code:

1. The entire Ordinance could be vacated. In staff's opinion, it would not be possible to adopt a new ordinance with similar land use restrictions today post Proposition 207. The beneficial portions of the code addressing preservation of washes and open space and the requirement of pedestrian connections would therefore be lost. However, these goals are expressed in the General Plan. Also, the site plan review criteria in Chapter Eleven of the Zoning Code includes the preservation of natural drainage areas, the preservation of viewsheds and the importance of pedestrian connections. Therefore the only valuable tool lost in vacating the entire Ordinance is the 50 percent lot

coverage. However, in staff's opinion, the inclusion of parking area and driveways in the lot coverage is too restrictive. Generally, since parking requirements are based on the square footage of the building, the size of the building is constrained by the parking requirements. When a developer evaluates a property, the ratio of building square footage to parking requirements is a major factor when determining a building's size.

2. Portions of the code could be struck or modified, specifically the sections relating to lot coverage and setbacks.

3. The code could be amended to include language allowing the Community Development Director to make exceptions to the code in certain cases. As development begins in this area, the code would be applied as it stands. The Director would have the ability to negotiate waiving or modifying the code in exchange for the developer making changes to the project the Town cannot currently require, such as a solar installation.

The Overlay District Ordinance serves to identify a critical area of future development. However, the practical application of the Ordinance may not provide the best solution for this corridor. It is difficult to work in the abstract. The lack of a community/neighborhood vision for this corridor presents a challenge. Staff would like to make this area a priority to focus on with a series of neighborhood charettes to develop a vision of what the community wants to see in this area. This would be the most effective tool in guiding development for the highway corridor.

Recommendation:
Staff is asking the Commission to recommend a course of action regarding this Ordinance.

Attachments:
1. Exhibits
2. Section 3-14 of the Zoning Code – 89A Corridor Commercial Overlay District
3. Map of Overlay Area

Staff Report

EXHIBIT A

Version One

50-foot front setback and 50 percent maximum lot coverage drives development to back of lot, closer to residential properties.

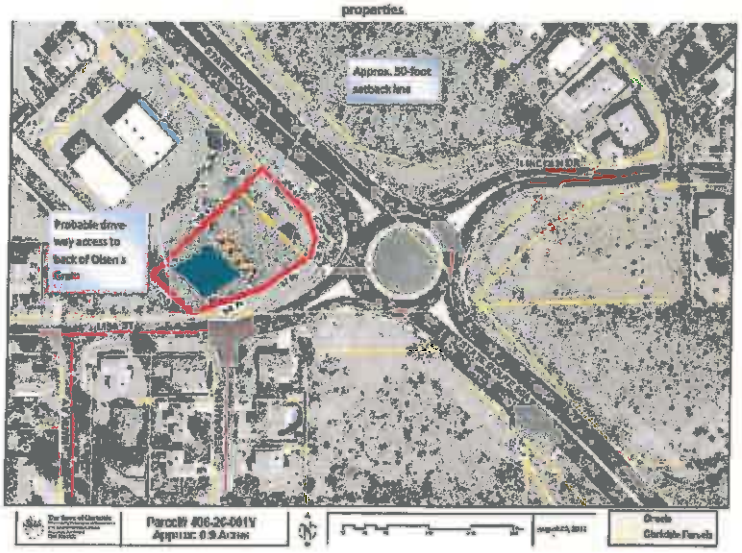

Version Two

Zero front setback creates strong pedestrian connection, drives building towards front. Parking is in rear, screened by building.

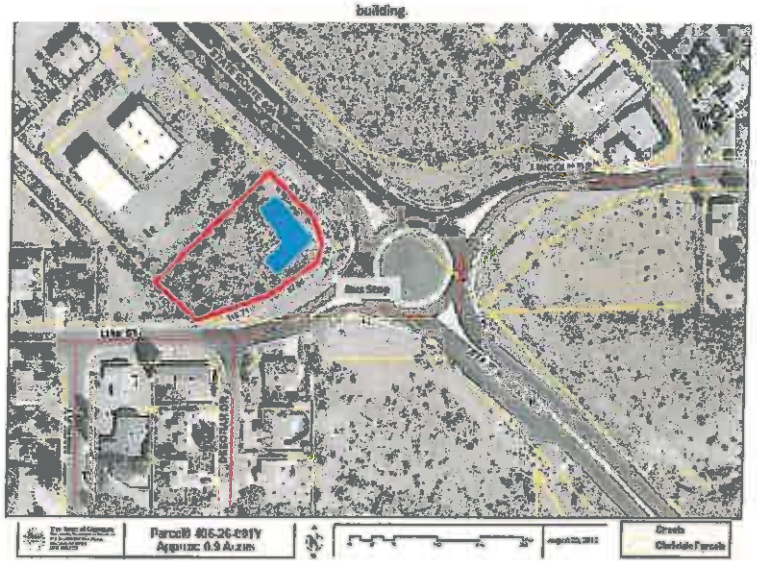

Staff Report

EXHIBIT B

Existing vegetation at Lisa Street Commercial Parcel

Staff Report

EXHIBIT C

Conlin property at Clarkdale Parkway/SR 89A intersection

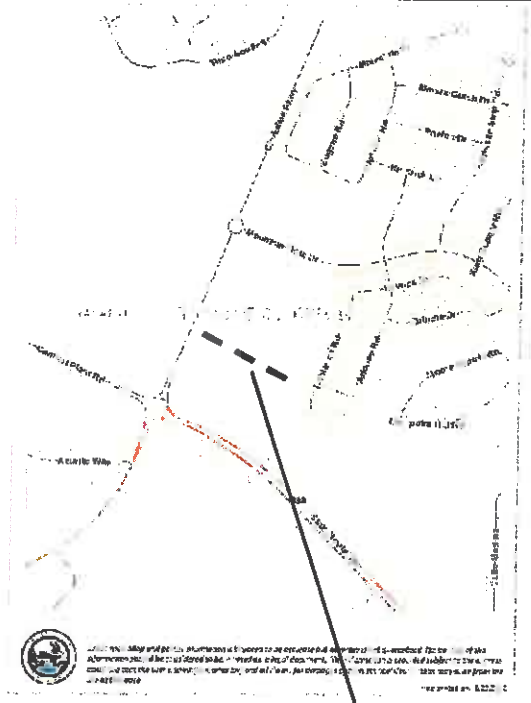

Two adjacent parcels with same owner along Mescal Spur

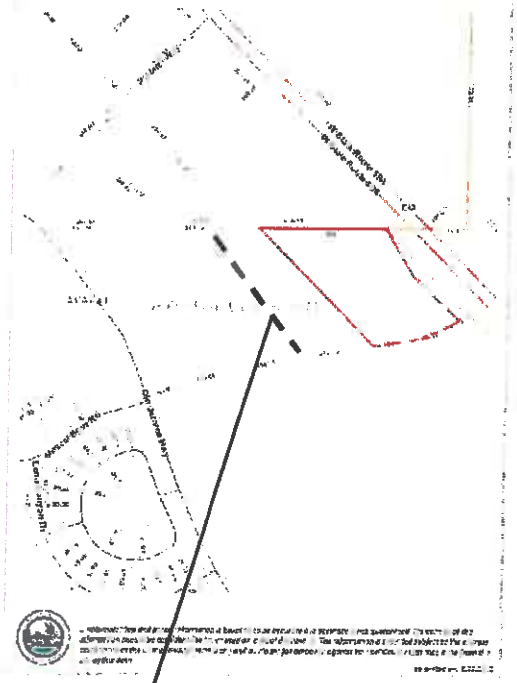

Approximate boundary of Overlay District

Staff Report

89A Corridor Commercial Overlay District

Section 3-14 89A Corridor Commercial Overlay District

A. Intent and Purpose:

The purpose and intent of the 89A Corridor Overlay Zone is to allow for the application and implementation of special design standards with the intent of achieving a sense of place by fostering a scale and form of development that emphasizes sensitivity to the pedestrian environment while accommodating the automobile and providing for efficient traffic movement. This is to be accomplished by providing for the sensitive placement of open spaces in relationship to building masses, shared use pathways, street furniture and landscaping features in a manner otherwise not insured by the application of the conventional bulk, landscaping and parking standards of the underlying zones.

B. Overlay Designation:

The 89A Corridor Overlay District shall be created five hundred feet either side of the center line of Highway 89A from the Eleventh Street intersection to the Town of Clarkdale boundary.

C. Viewshed Definition:

A viewshed is an area of land, water, and other environmental elements that is visible from a fixed vantage point. The term is used widely in such areas as urban planning, archaeology, and military science. In urban planning, for example, viewsheds tend to be areas of particular scenic or historic value that are deemed worthy of preservation against development or other change. The preservation of viewsheds is a goal in the designation of open space areas, green belts, and community separators.

D. Design Guidelines:

Commercial development shall use the site analysis and landscape inventory to determine the building/construction envelope for the building, parking area, driveway, and all accessory buildings. Area outside of the building/construction envelope shall remain permanent undisturbed desert.

A site analysis shall be required with any development plan. The site analysis is a tool to assist in determining areas to be retained in a natural undisturbed state and areas that may most easily be developed, which include areas with minimal vegetation or previously graded areas. Areas proposed for development by the applicant are to be identified on the plans through use of concept diagrams. Similarly, areas to be maintained in an undisturbed state are also to be identified on all plans.

1. Land contours at two-foot intervals or smallest interval available.
2. Wash corridors and preliminary hydrological information (cfs flows, onsite and off-site, and velocity).

3. Identify specimen plants and significant stands of vegetation.
4. Identify potential view corridors.
5. Identify potential development areas.
6. Identify potential street alignments.
7. Identify the one hundred year floodplain boundary as defined by the Federal Emergency Management Act (FEMA) and one hundred year twenty-four-hour flow boundaries for washes not addressed by FEMA.
8. Identify and coordinate trail locations with the City using the City's recreational trails plan.

Lot coverage allowed for building, parking, driveways, and accessory buildings is fifty percent with fifty percent of the parcel's gross area maintained as permanent undisturbed desert

Construction envelope setbacks shall be fifty feet in the front yard. Side and rear yard setbacks for the overall master planned limited commercial node shall be limited to the exterior boundary of the master planned area. This shall be a minimum of fifty feet. Side and rear yard setbacks for interior parcels may be zero so that building development may occur in clusters. The Community Development Department shall base placement of the construction/building envelope on the results of the site analysis and a determination of the location of any significant vegetation, specimen vegetation and/or topographical features such as washes.

Parking areas for commercial development shall be landscaped with landscape material from the Town of Clarkdale Plant List and shall have twenty-five percent landscape area over the parking area, including drive aisles. A minimum fifty percent of required landscaped area is to be living vegetation. This plant material shall be maintained in a healthy condition. Parking shall not comprise more than forty percent of the front yard behind the required landscaped setback.

Signage shall be minimal and shall consist of either wall signs or monument signs. Wall signs shall not exceed eight feet in height and monument signs no greater than four feet in height.

Wash corridors containing regional, primary, or secondary washes shall be maintained as permanent undisturbed open space and incorporated into the site design, except at wash crossings which must be restored as closely as possible to a natural appearing state, both upstream and down, in accordance with plans approved by the Community Development Department.

1. Regional wash corridors: Flows of seven hundred fifty cfs or greater during the one hundred-year storm. Characterized as large and picturesque. The area within this

boundary is to be maintained as permanent undisturbed open space with the exception of wash crossings.

2. Primary washes: Flows of fifty cfs or greater during the one hundred-year storm. The area within this boundary is to be maintained as permanent undisturbed open space with the exception of wash crossings.
3. Secondary washes: Flows from ten cfs to fifty cfs during the one hundred-year storm event. Setbacks for any structures, fences or walls shall be no less than an average of twenty-five feet with a minimum of ten feet from the wash top of the uppermost bank hinge. A secondary wash is to be maintained undisturbed and incorporated into the site design as an amenity.

Minor washes: Flows less than ten cfs during the one hundred-year storm event. Washes this size, not supporting any significantly thriving vegetation as determined by the Community Development Department may be incorporated into the parcel drainage plan. Where significant vegetation does exist, washes shall be maintained in existing condition or flows may be accommodated in another acceptable way as determined by the Community Development Department. Setbacks for any structures, fences or walls shall be a minimum of ten feet.

Street patterns and lot design shall allow direct access to washes or open space areas for maintenance of annual and non-native vegetation to prevent fire hazards and allow fire department access in case of fire.

Any development occurring in the 89A Corridor District shall be required to participate in the Town of Clarkdale Trails Plan by providing appropriately designed pathways that meet the Town of Clarkdale hardscape design standards.

1. Clearly defined pedestrian connections shall be provided
   - -Between a public right-of-way and building entrance
   - -Between parking lot or structure and building entrances
   - -Between adjacent properties
2. Pedestrian connections shall not be less than 5 feet wide
3. Pedestrian connections should be clearly defined by textured paving across vehicular lanes and pedestrian scale lighting, bollard lighting, accent lighting or a combination

E. Permitted Land Uses:

The range of land uses permitted with the 89A Corridor Commercial Overlay District shall be those afforded by the underlying zoning districts as established by the Town of Clarkdale Zoning Ordinance and the Official Zoning Map.

F. Variation of Conventional Standards:

Cluster development is encouraged to provide for flexibility of design and development of land in such a manner as to promote the most appropriate use of land, to facilitate the

adequate and economical provision of streets and utilities, and to preserve the natural and scenic qualities of open lands. Design in the 89A Corridor is intended to reflect Contemporary Clarkdale: A area in which architectural features shall include traditional textures and colors in harmony with more contemporary materials, textures and colors.
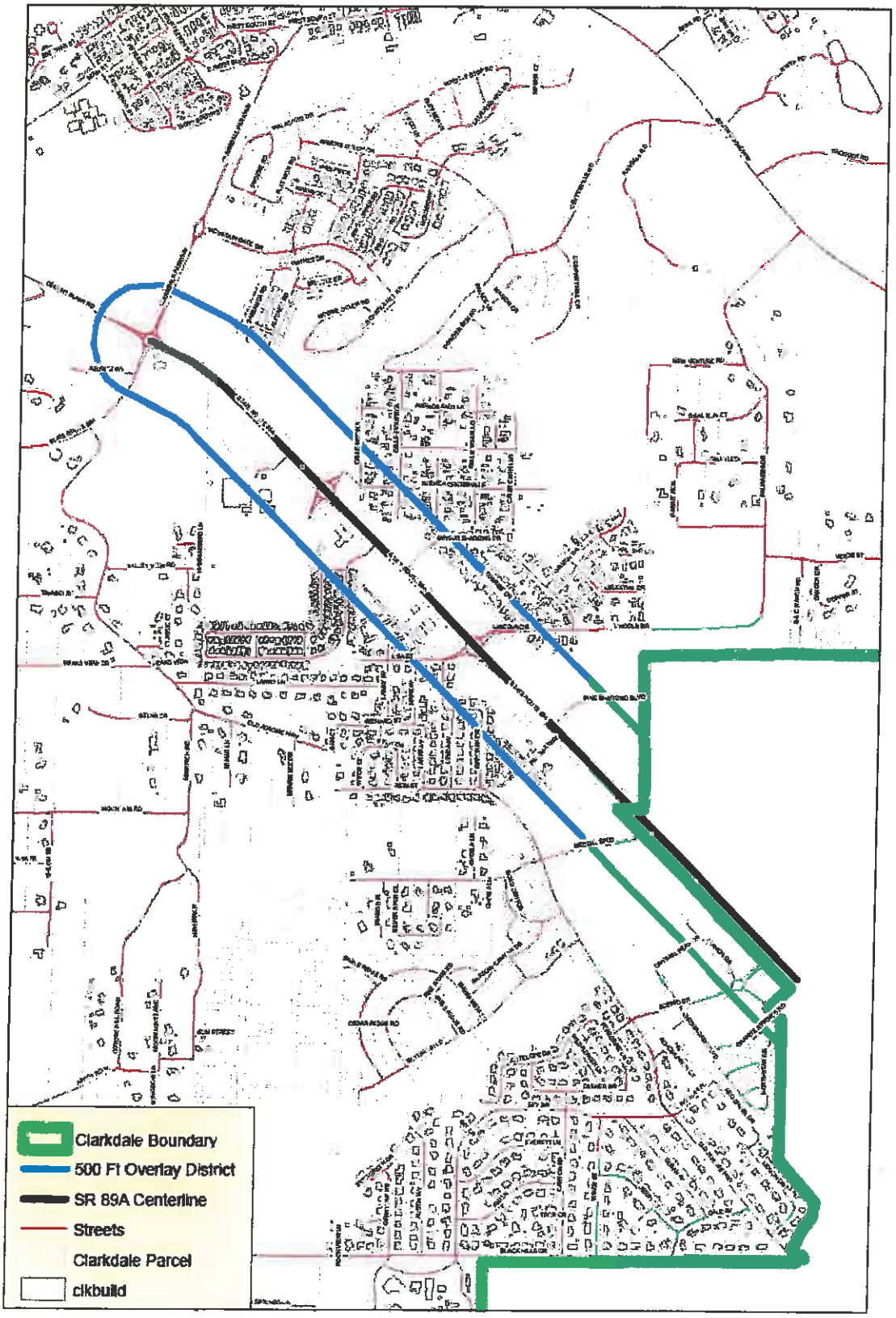
Staff Report